Polo Estate 1998 ➤

Diesel direct injection and glow plug system									
Engine ID	AEY	AHB	AHU	AKW	ALE	AFN			

Edition 05.1998

Protected by copyright. Copying for private or commercial purposes, in part or in whole, is not permitted unless authorised by Volkswagen AG. Volkswagen AG does not guarantee or accept any liability with respect to the correctness of information in this document. Copyright by Volkswagen AG.

satelettronica

List of Workshop Manual Repair GroupsList of Workshop Manual Repair GroupsList of Workshop Manual Repair Groups

Polo Estate 1998 ➤

Diesel direct injection and glow plug system

Repair Group

01 - Self-diagnosis

23 - Mixture preparation, Injection

28 - Glow plug system

satelettronica

Protected by copyright. Copying for private or commercial purposes, in part or in whole, is not permitted unless authorised by Volkswagen AG. Volkswagen AG does not guarantee or accept any liability with respect to the correctness of information in this document. Copyright by Volkswagen AG.

Technical information should always be available to the foremen and mechanics, because their careful and constant adherence to the instructions is essential to ensure vehicle road-worthiness and safety. In addition, the normal basic safety precautions for working on motor vehicles must, as a matter of course, be observed.

All rights reserved.
No reproduction without prior agreement from publisher.

Copyright © 2011 Volkswagen AG, Wolfsburg

Contents

01 - Self-diagnosis . . . 1

1 Self-diagnosis . . . 1
1.1 Self-diagnosis . . . 1
1.2 Features of self-diagnosis . . . 1
1.3 Technical data of self-diagnosis . . . 1
1.4 Connecting fault reader V.A.G 1551 and selecting engine electronics control unit . . . 2

2 Fault memory . . . 4
2.1 Fault memory . . . 4
2.2 Interrogating fault memory . . . 4
2.3 Fault table . . . 5
2.4 Erasing fault memory . . . 12

3 Final control diagnosis . . . 13
3.1 Final control diagnosis . . . 13
3.2 Performing final control diagnosis . . . 13

4 Measured value blocks . . . 18
4.1 Measured value blocks . . . 18
4.2 Safety precautions . . . 18
4.3 Reading measured value block . . . 18
4.4 Evaluating measured value block, engine code AEY . . . 19
4.5 Evaluating measured value blocks, engine codes AHB, AKW . . . 26
4.6 Evaluating measured value blocks, engine codes AFN, AHU, ALE . . . 33

23 - Mixture preparation, Injection . . . 45

1 Servicing Diesel direct injection system . . . 45
1.1 Servicing Diesel direct injection system . . . 45
1.2 Safety precautions . . . 45
1.3 Rules for cleanliness . . . 45
1.4 Fitting locations overview . . . 46
1.5 Servicing injection pump . . . 53
1.6 Setting engine to number 1 cylinder with engine removed . . . 58
1.7 Checking throttle valve positioner housing . . . 59
1.8 Removing and installing injection pump . . . 61
1.9 Dynamically checking and adjusting commencement of injection . . . 66
1.10 Checking valve timing . . . 69
1.11 Removing and installing injectors . . . 71
1.12 Servicing injectors . . . 72
1.13 Renewing injection timing device cover O-ring . . . 73

2 Checking components and functions . . . 73
2.1 Checking components and functions . . . 73
2.2 Checking Diesel direct injection system voltage supply . . . 73
2.3 Checking engine speed sender . . . 75
2.4 Checking intake manifold pressure sender and altitude sender . . . 77
2.5 Checking coolant temperature sender . . . 78
2.6 Checking brake light switch and brake pedal switch . . . 81
2.7 Checking clutch pedal switch . . . 84
2.8 Checking intake manifold sender . . . 86
2.9 Checking intake air temperature sender . . . 89
2.10 Checking fuel temperature sender . . . 92
2.11 Checking modulating piston movement sender and quantity adjuster . . . 95
2.12 Checking needle lift sender . . . 101
2.13 Checking injection timing control range . . . 103
2.14 Checking throttle valve positioner . . . 108
2.15 Checking exhaust gas recirculation and air mass meter function . . . 111

Proof of copyright. Copyright by Volkswagen AG. Volkswagen AG does not guarantee or accept any liability with respect to the correctness of information in this document. Copyright by Volkswagen AG. Copy for private use only. Not for commercial purposes, in part or in whole, is not permitted unless authorised by Volkswagen AG.
satelettronica

2.16 Checking speedometer sender 115
3 Replacing, coding and matching engine control unit 117
3.1 Replacing, coding and matching engine control unit 117
3.2 Replacing engine control unit 117
3.3 Coding engine control unit 118
3.4 Matching engine control unit to electronic immobilizer 120

28 - Glow plug system 122
1 Checking glow plug system 122
1.1 Checking glow plug system 122
1.2 Checking glow plugs 122

Protected by copyright. Copying for private or commercial purposes, in part or in whole, is not permitted unless authorised by Volkswagen AG. Volkswagen AG does not guarantee or accept any liability with respect to the correctness of information in this document. Copyright by Volkswagen AG.

satelettronica

01 - Self-diagnosis

1 - Self-diagnosis

1.1 - Self-diagnosis

1.2 - Features of self-diagnosis

The control unit for the Diesel direct injection system is equipped with a fault memory.

If faults occur in the sensors and components being monitored, they will be stored in the fault memory together with an indication of the type of fault.

Faults which only occur sporadically will have the addendum "sporadic fault" on the print out. These faults will be indicated on the display by the addendum "/SP". The cause of sporadic faults can be e.g. a loose contact or a brief open circuit. If a sporadic fault does not occur again within 50 engine starts, it will be erased from the fault memory.

If faults are recognized, that affect the driving condition then the glow period warning lamp flashes.

The faults stored can be read-out with the fault reader V.A.G 1551 or the vehicle system tester V.A.G 1552 => Page 4 .

The fault memory must be erased after the faults has been eliminated => Page 12 .

Note:

General information for self-diagnosis is in the fault reader V.A.G 1551 and the vehicle system tester V.A.G 1552 instruction manuals.

1.3 - Technical data of self-diagnosis

Equipment

- The data transfer between control unit and fault reader V.A.G 1551 or vehicle system tester V.A.G 1552 is carried out in the operating mode "Rapid data transfer".
- Fault memory: Non-volatile memory and volatile memory1)

1) Will be cancelled after 50th engine start if fault has not occurred again.

Interrogating control unit versions

The control unit version is displayed when the fault reader V.A.G 1551 or the vehicle system tester V.A.G 1552 is connected and engine electronics control unit selected => Page 2 .

Selectable functions when using the fault reader V.A.G 1551 or V.A.G 1552

The prerequisites for selecting the desired functions can be taken from the following table.

Protected by copyright. Copyright by Volkswagen AG.
Copyrighted by Volkswagen AG. Volkswagen AG does not guarantee or accept any liability with respect to the correctness of information in this document. Copying for private or commercial purposes, in part or in whole, is not permitted unless authorised by Volkswagen AG.
satelettronica

Selectable functions under address word 01, engine electronics

Function		Prerequisite		
Functions on fault reader V.A.G 1551 or on system tester V.A.G 1552		Engine stopped, ignition switched on	Engine running at idling speed	Vehicle being driven
01	Interrogate control unit version	yes	yes	yes
02	Interrogate fault memory	yes1)	yes	yes
03	Final control diagnosis	yes	yes	no
04	Basic setting	no	yes	no
05	Erase fault memory	yes	yes	yes
06	End output	yes	yes	yes
07	Code control unit2)	yes	no	no
08	Read measured value block	yes	yes	yes

1) Only carry out with ignition switched on, when engine does not start.

2) Function not for engine code AEY with MSA12 engine control unit

1.4 - Connecting fault reader V.A.G 1551 and selecting engine electronics control unit

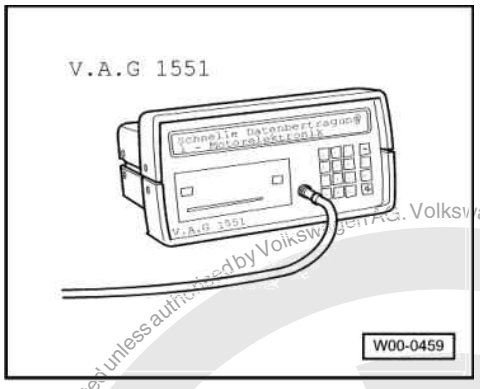

Special tools, workshop equipment, testers, measuring instruments and auxiliary items required

- > V.A.G 1551 Fault reader

Note:

The vehicle system tester V.A.G 1552 can be used instead of the fault reader V.A.G 1551, however a print-out is not possible.

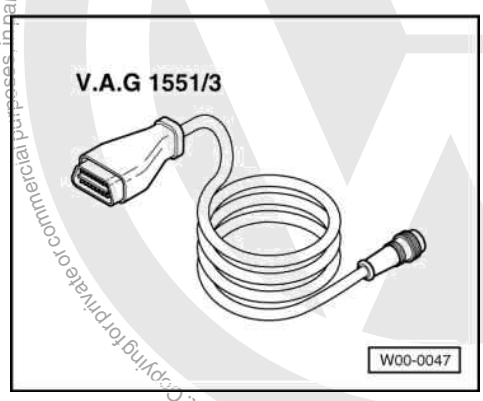

Protected by copyright. Copying for private or commercial purposes, in part or in whole, is not permitted unless authorised by Volkswagen AG. Volkswagen AG does not guarantee or accept any liability with respect to the correctness of information in this document. Copyright by Volkswagen AG.

satelettronica

- -> V.A.G 1551/3A cable

Test conditions

- Battery voltage OK.

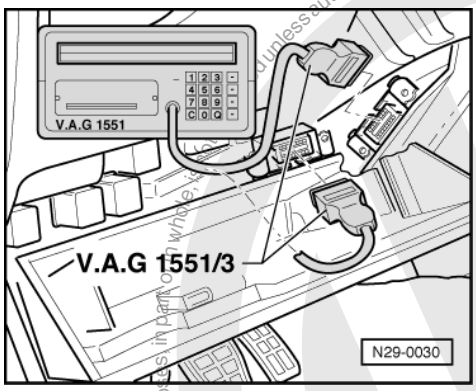

- Fuse 21 OK.
- Earth connections on engine and gearbox OK.

Work sequence

- -> Fold driver's side stowage compartment down.
- Connect fault reader V.A.G 1551 with cable V.A.G 1551/3.

After the fault reader has been connected:

- Depending upon desired function:
  Switch ignition on
  or
  Start engine => Page 1 , Table "Selectable functions".

Notes:

- If the display does not indicate as described in the work sequence:

=> Fault reader operating instructions

- If due to an input fault "Fault in the data transfer!" is displayed, pull wire off fault reader, reconnect and repeat work step.

-> Indicated on display:

```
V.A.G - Self-diagnosis      HELP
1 - Rapid data transfer*
2 - Flash code output*
```

* Appears alternately

- Operate fault reader taking into account the information on the display:
- Press key 1 for "Rapid data transfer".
- Press keys 0 and 1 for address word "Engine electronics" and confirm entry with Q key.

-> The fault reader V.A.G 1551 display will show the control unit identification, e.g.:

```
028906021CQ 1.9 ltr.     R4     EDC SG
     D1V □
Coding 0000      WSC0000
```

- 028906021CQ = Part No. of the control unit (for up-to-date control unit versions see parts catalogue)
- 1.9 ltr./1.7 ltr. = Engine capacity
- R4 = Type of engine (4 Cyl. in-line engine)
- EDC = Injection system (Electronic Diesel Control)
- SG = Gearbox type: manual gearbox
  (AG = automatic gearbox)

Protected by copyright. Copying for private or commercial purposes, in part or in whole, is not permitted unless authorised by Volkswagen AG. Volkswagen AG does not guarantee or accept any liability with respect to the correctness of information in this document. Copyright by Volkswagen AG.
satelettronica

- D1V = Control unit software version
- Coding 00002 coding variant

Coding	For vehicles with
00001	Automatic gearbox
00002	Manual gearbox
00005	Manual gearbox engine code ALE in Caddy

- WSC xxxxx = Workshop code from V.A.G 1551, of the workshops who carried out the last coding. (If the factory coding has not been changed, WSC 00000 appears)

- Press the ⇒key.

-> Indicated on display:

```
Rapid data transfer      HELP
Select function XX
```

- Further measures see repair procedures.

2 - Fault memory

2.1 - Fault memory

2.2 - Interrogating fault memory

Special tools, workshop equipment, testers, measuring instruments and auxiliary items required

- Fault reader V.A.G 1551 (or vehicle system tester V.A.G 1552) with cable V.A.G 1551/3

Work sequence

- Connect fault reader V.A.G 1551 (V.A.G 1552) and with the "Address word" 01 select the engine electronics control unit. When doing this the engine should be idling.
  (Connecting fault reader and selecting engine electronics control unit => Page 2 .)

Only when engine does not start:

- Switch ignition on.

- Switch on fault reader printer with the print key. The warning lamp in key must light up.

-> Indicated on display:

```
Rapid data transfer      HELP
Select function XX
```

- Operate fault reader taking into account the information on the display:
- Press keys 0 and 2 for function "Interrogate fault memory" and confirm entry with Q key.

-> The number of faults stored or "No fault recognised!" will be shown on the display.

```
X Faults recognised!
```

Protected by copyright. Copying for private or commercial purposes, in part or in whole, is not permitted unless authorised by Volkswagen AG. Volkswagen AG does not guarantee or accept any liability with respect to the correctness of information in this document. Copyright by Volkswagen AG.
satelettronica

If one or more faults are stored:

The stored faults will be displayed and printed out one after the other.

-> After the stored faults have been printed out, the display will show:

```
Rapid data transfer      HELP
Select function XX
```

The fault reader is required partially for further fault reading therefore leave the engine running and the fault reader connected.

- Locate and eliminate faults printed out as per fault table => Page 5 .
- Afterwards erase fault memory => Page 12

If no fault is stored:

- Press the ⇒key.

-> Indicated on display:

```
Rapid data transfer      HELP
Select function XX
```

- Press keys 0 and 6 for the "End data transfer" function and confirm input with the Q key.

2.3 - Fault table

Notes:

- The fault tables are listed according to the 5 digit fault code on the left.
- Explanation of the fault types (e.g. "open circuit/short circuit to earth"):

=> Fault reader operating instructions

- If components are indicated as faulty:
  First check the wiring and connectors to these components as well as the system earth connections according to current flow diagram. This is particularly relevant if faults are output as "occurring sporadically" (SP).
- Erase fault memory after rectifying faults.

V.A.G 1551 print-out	Possible causes of fault	Possible effects	Fault remedy
Throttle valve positioner -V60 00282			
Short to positive	- Short to positive - V60 defective/sticking in direction open	- Cold start problems - Cold running problems - Hard load changes - Poor idling characteristics	- Check V60 =>Page 108
Open circuit	- Wiring open circuit		
Open circuit/short to earth	- Wiring open circuit or short to earth - V60 defective		

V.A.G 1551 print-out	Possible causes of fault	Possible effects	Fault remedy
00513 Engine speed sender -G28			

Protected by copyright. Copying for private or commercial purposes, in part or in whole, is not permitted unless authorised by Volkswagen AG. Volkswagen AG does not guarantee or accept any liability with respect to the correctness of information in this document. Copyright by Volkswagen AG.
satelettronica

Implausible signal	- G28 defective - Gap speed sender/sender wheel too large - Metal swarf on G28 or mounting loose	- Glow period warning lamp lights up - Increased idling speed - Poor starting - Engine runs rough - Reduced output - No indication on rev-counter	- Check G28 =>Page 75
No signal	- G28 defective - Wiring open or short circuit		

V.A.G 1551 print-out	Possible causes of fault	Possible effects	Fault remedy
00519 Intake manifold pressure sender - G71 implausible signal	- Charge pressure control solenoid valve (N75) defective - Hose connections interchanged, not connected - Intake manifold pressure sender (G71) defective	- Reduced output - Increased emission figures	- Check N75 =>Page 77
Short to positive			
Short to earth			
Voltage supply			

V.A.G 1551 print-out	Possible causes of fault	Possible effects	Fault remedy
00522 Coolant temperature sender - G62 Short to earth	- G62 defective - Wiring short to earth	- Black exhaust when starting - Engine pre-heating not operating - Glow period always approx. 20 sec.	- Check G62 =>Page 78
Open circuit/ short to positive	- G62 defective - Wiring open circuit or short to positive		
Implausible signal	- G62 defective		

V.A.G 1551 print-out	Possible causes of fault	Possible effects	Fault remedy
00523 Intake air temperature sender - G42 Short to earth	- G42 defective - Wiring has short to earth	- Engine pre-heating not operating	- Check G42 =>Page 89
Open circuit/short to positive	- G42 defective - Open circuit or short to positive		

V.A.G 1551 print-out	Possible causes of fault	Possible effects	Fault remedy
00527 Intake manifold temperature sender -G721) Short to earth	- G72 defective - Wire has short to earth	- Engine pre-heating not operating	- Check G72 =>Page 89
Open circuit/short to positive	- G72 defective - Open circuit or short to positive		
00528			

Volkswagen AG. Volkswagen AG does not guarantee the accuracy and completeness of information in this document. Copyright by Volkswagen AG. Protected by copyright. Duplication in whole or in part is not permitted unless authorised by Volkswagen AG for commercial purposes or private use.

satelettronica

Altitude sender -F96 Open circuit/short to earth	- F96 defective - Wiring open circuit or short to earth	- Black exhaust at altitude	- Check F96 => Page 77

1) Designated as intake air temperature sender (G42) with engine code AHB and AKW in the current flow diagram and checked as such in the component test.

V.A.G 1551 print-out	Possible causes of fault	Possible effects	Fault remedy
00532 Supply voltage implausible signal	- Current supply relay terminal 30 (J317) defective	- Various running problems including engine will not start	- Check current supply for Diesel direct injection system control unit =>Page 73
00539 Fuel temperature sender -G81 Short to earth	- G81 defective - Wiring short to earth	- Increased emission figures	- Check G81 => Page 92
Open circuit/short to positive	- G81 defective - Wiring open circuit or short to positive		

V.A.G 1551 print-out	Possible causes of fault	Possible effects	Fault remedy
00542 Needle lift sender -G80 Input open	- G80 defective - Wiring open circuit or short circuit	- Glow period warning lamp lights up - Engine runs rough - Reduced output - Increased emission figures	- Check G80 => Page 101
Open circuit/short to positive			
Short to earth			
Implausible signal	- G80 defective - Injection system wiring to 3rd cylinder not OK. - Fuel shortage - Air in fuel system		

V.A.G 1551 print-out	Possible causes of fault	Possible effects	Fault remedy
00550 Injection commencement regulation Control difference	- Commencement of injection valve (N108) defective - Needle lift sender (G80) defective - Fuel tank empty - Fuel supply not OK., fuel shortage - Air in fuel system - Start of delivery not OK	- Engine runs rough - Reduced output - Poor cold start characteristics - Increased emission figures	- Check N108 =>Page 66

V.A.G 1551 print-out	Possible causes of fault	Possible effects	Fault remedy
00553 Air mass meter -G70 Implausible signal	- G70 defective	- Reduced output - Black exhaust	- Check function of exhaust gas recirculation and air mass meter =>Page 111

Protected by copyright. Copyright by Volkswagen AG. Volkswagen AG does not accept any liability with respect to the correctness of information in this document. Copyright by Volkswagen AG. Copying for private or commercial purposes, in part or in whole, is not permitted unless authorised by Volkswagen AG. Volkswagen AG does not guarantee
satelettronica

Open circuit/short to earth	- G70 defective - Wiring open circuit or short to earth		
Short to positive	- G70 defective - Wiring open circuit or short to positive		
Voltage supply	- Wiring open or short circuit		

V.A.G 1551 print-out	Possible causes of fault	Possible effects	Fault remedy
00575 Intake manifold pressure Control difference	- Charge pressure control solenoid valve (N75) defective - Hose connections interchanged, not connected - Leakage between turbocharger and engine (charge air circuit) - Turbocharger defective	- Reduced output	- Check N75 =>Page 13 , Final control diagnosis Check charge pressure control => Repair group 21; Checking charge pressure system; Checking charge pressure control Checking charge pressure control
00625 Speed signal implausible signal	- No signal from speedometer (G21) or speedometer sender (G22)	- Speedometer display not OK. - Cruise control system switched off - Vehicle jerks when changing gear - Air conditioner is switched off	- Check signal from G21 or G22 =>Page 115
Signal too large			

V.A.G 1551 print-out	Possible causes of fault	Possible effects	Fault remedy
00626 Glow period warning lamp - K29 Open circuit/short to earth	- Wiring open circuit - Bulb defective	- Glow period warning lamp not functioning	- Check glow period warning lamp -K29 => Current flow diagrams, Electrical fault finding and Fitting locations binder
	- Short to earth	- Glow period warning lamp permanently on	
Short to positive	- Short to positive	- Glow period warning lamp not functioning	

V.A.G 1551 print-out	Possible causes of fault	Possible effects	Fault remedy
00668 Vehicle voltage terminal 30 Signal too small	- Current supply relay terminal 30 (J317) defective	- Engine will not start - Various running problems including engine will not start	- Check Diesel direct injection system control unit current supply =>Page 73
Implausible signal			
00671 CCS Switch -E45			

Copyright by Volkswagen AG. Volkswagen AG does not guarantee or accept any liability with respect to the correctness of information in this document. Copyright by Volkswagen AG. Reproduced by permission only, in part or in whole, is not permitted unless authorised by Volkswagen AG.
satelettronica

Undefined switch position	- E45 defective - Wiring open/short circuit	- Cruise control system switched off	- Check cruise control system => Current flow diagrams, Electrical fault finding and Fitting locations binder

V.A.G 1551 print-out	Possible causes of fault	Possible effects	Fault remedy
00741 Brake pedal monitoring Implausible signal	- Brake light switch (F) defective - Brake pedal switch (F47) defective	- Glow period warning lamp flashes - Brake light defective	- Check F and F47 =>Page 81
00765 Modulating piston movement sender -G149	- Injection pump defective - Wiring open/short circuit	- Glow period warning lamp flashes - Various running problems - Engine will not start	- Check G149 => Page 95

V.A.G 1551 print-out	Possible causes of fault	Possible effects	Fault remedy
00777 Accelerator position sender - G79 Implausible signal	- G79 defective - G79 incorrectly adjusted	- Glow period warning lamp flashes - Increased idling speed	- Check and adjust G79 => Repair group 20; Removing and installing parts of fuel supply system; Servicing accelerator mechanism Servicing accelerator mechanism
Short to positive	- G79 defective - Wiring short to positive		
Voltage supply	- Wiring open or short circuit		
01044 Control unit incorrectly coded	- Invalid control unit coding		- Code control unit =>Page 118

V.A.G 1551 print-out	Possible causes of fault	Possible effects	Fault remedy
01117 Load signal for alternator terminal DF Implausible signal	- Alternator defective - Voltage regulator defective - Wiring open circuit	- Engine pre-heating not operating	- Check alternator => Current flow diagram, Electrical fault finding and Fitting locations binder
01180 Engine/air conditioner cut-off electrical connection			

Protected by copyright. Copying for private or commercial purposes, in part or in whole, is not permitted unless authorised by Volkswagen AG. Volkswagen AG does not guarantee or accept any liability with respect to the correctness of information in this document. Copyright by Volkswagen AG.
satelettronica

Short to positive	- Short in the wiring	- Vehicle acceleration reduced, when air conditioner is switched on	- Check air conditioner compressor cut-in =>Page 13 , final control diagnosis

V.A.G 1551 print-out	Possible causes of fault	Possible effects	Fault remedy
01193 Low heat output relay -J359 Open circuit/short to earth	- Wiring open circuit - Low heat output relay -J359 or high output relay -J360 defective	- Engine pre-heating not functioning	- Check J359 or J360 =>Page 13 , final control diagnosis
	- Short to earth	- Engine preheating permanently on	
Short to positive	- Short to positive	- Engine preheating not functioning	
01193 High heat output relay -J360 Short to positive	- Wiring open circuit - Short to positive - High heat output relay -J360 defective	- Engine preheating not functioning	- Check J360 =>Page 13 , Final control diagnosis

V.A.G 1551 print-out	Possible causes of fault	Possible effects	Fault remedy
01208 Data changed	Fault in data -Data manipulated	- Vehicle looses registration (Germany)	- Renew J248 => Page 117
01237 Fuel cut-off valve -N109 Mechanical fault	- N109 defective, leaking or sticking	- Reduced output - Engine will not start	- Check N109 =>Page 13 , Final control diagnosis
Open/short circuit to earth	- N109 defective - Wiring open circuit/short to earth		

V.A.G 1551 print-out	Possible causes of fault	Possible effects	Fault remedy
01242 Control unit output stages Open/short to positive	- All components activated by final control diagnosis	- Various running problems - Engine stops	- Carry out final control diagnosis =>Page 13 Check wiring connections to control elements Control unit defective if control elements OK.
Implausible signal	- Exhaust gas recirculation valve N18 defective	- Increased emissions	

V.A.G 1551 print-out	Possible causes of fault	Possible effects	Fault remedy
01262 Charge pressure control solenoid valve -N75 Open circuit/short to earth	- Wiring open circuit - Solenoid valve defective	- Reduced output - Charge pressure too low	- Check N75 =>Page 13 , Final control diagnosis

Protected by copyright. Copyright by Volkswagen AG. Volkswagen AG does not guarantee or accept any liability with respect to the correctness of information in this document. Copyright by Volkswagen AG. Volkswagen AG does not permit unauthorised use of this document for commercial purposes in part or in whole, is not permitted.
satelettronica

	- Short to earth	- Reduced output - Charge pressure too high	
Short to positive	- Short to positive	- Reduced output - Charge pressure too low	

V.A.G 1551 print-out	Possible causes of fault	Possible effects	Fault remedy
01265 Exhaust gas recirculation valve -N18			
Open circuit/short to earth	- Wiring open circuit - Exhaust gas recirculation valve defective	- No exhaust gas recirculation	- Check N18 =>Page 13 , Final control diagnosis
	- Short to earth	- Too much exhaust gas recirculation - Reduced output, black smoke	
Short to positive	- Short to positive	- No exhaust gas recirculation	
01266 Glow plug relay -J52			
Open circuit/short to earth	- Wiring open circuit - Glow plug relay defective	- Glow plug system not working	- Check J52 =>Page 13 , Final control diagnosis
	- Short to earth	- Glow plug system permanently on	
Short to positive	- Short to positive	- Glow plug system not working	

V.A.G 1551 print-out	Possible causes of fault	Possible effects	Fault remedy
01268 Metering device -N146			
Control difference	- Injection pump defective - Wiring open/short circuit	- Glow period warning lamp flashes - Various running problems - Engine will not start	- Check N146 =>Page 95
Lower limit value	- Metering device incorrectly set - Metering device blocked by dirt	- Black smoke - Rough idling	
Upper limit value	- Metering device incorrectly set - Metering device blocked by dirt	- Jerking, poor performance	

V.A.G 1551 print-out	Possible causes of fault	Possible effects	Fault remedy
01269 Commencement of injection valve -N108			
Open circuit/short to earth	- Wiring open circuit - Commencement of injection valve defective	- Engine knocks at idling, because commencement of injection is constantly "advanced"	- Check N108 =>Page 13 , Final control diagnosis
	- Short to earth	- Poor performance, because commencement of injection is constantly "retarded"	
Short to positive	- Short to positive	- Engine knocks at idling, because commencement of injection is constantly "advanced"	

V.A.G 1551 print-out	Possible causes of fault	Possible effects	Fault remedy

Protected by copyright. Copyright by Volkswagen AG. Volkswagen AG does not guarantee or accept any liability with respect to the correctness of information in this document. Copyright by Volkswagen AG. Volkswagen AG, in part or in whole, is not permitted unless authorised by Volkswagen AG. Volkswagen AG does not guarantee or accept any liability with respect to the correctness of information in this document. Copyright by Volkswagen AG.
satelettronica

17978 Engine control unit blocked	- Attempted manipulation - Short in communication wire - Fault in immobilizer system - Immobilizer control unit defective/missing - Engine control unit has been replaced and not adapted (matched) to the immobilizer	- Engine starts briefly and then stops again - Glow period warning lamp lights up	- Match engine control unit to electronic immobilizer => Page 120 Check electronic immobilizer: => Repair group 96; Servicing electronic immobilizer
65535 Control unit -J248 defective	- Control unit internals defective	- Various running problems - Engine will not start - Glow period warning lamp flashes	- Replace J248 => Page 117

2.4 - Erasing fault memory

Special tools, workshop equipment, testers, measuring instruments and auxiliary items required

- Fault reader V.A.G 1551 or vehicle system tester V.A.G 1552 with cable V.A.G 1551/3

Test conditions

- Fault eliminated

Note:

After eliminating faults the fault memory must be interrogated again as follows and then erased.

Work sequence

- Connect fault reader V.A.G 1551 (V.A.G 1552) and select engine electronics control unit with the "Address word" 01. When doing this the engine must be running at idling speed.
  (Connecting fault reader and selecting engine electronics control unit => Page 2 .)

-> Indicated on display:

```
Rapid data transfer      HELP
Select function XX
```

- Press keys 0 and 2 for function "Interrogate fault memory" and confirm entry with Q key.

```
Rapid data transfer      HELP
Select function XX
```

  -> Press ⇒key until all faults still stored have appeared and the display reads:
- Press keys 0 and 5 for the function "Erase fault memory" and confirm entry with Q key.

-> Indicated on display:

```
Rapid data transfer
Fault memory is erased!
```

- If the fault memory will not erase there is a fault still in the system and this must be rectified.
- Press the ⇒key.

-> Indicated on display:

```
Rapid data transfer      HELP
Select function XX
```

Protected by copyright. Copying or in whole or in part is not permitted unless authorised by Volkswagen AG. Volkswagen AG does not guarantee or accept any liability with respect to the correctness of information in this document. Copyright by Volkswagen AG.

satelettronica

- Press keys 0 and 6 for the "End data transfer" function and confirm input with the Q key.
- Carry out a road test and interrogate fault memory again. No faults should be shown.

3 - Final control diagnosis

3.1 - Final control diagnosis

3.2 - Performing final control diagnosis

Special tools, workshop equipment, testers, measuring instruments and auxiliary items required

- Fault reader V.A.G 1551 with cable V.A.G 1551/3

Test requirements for vehicles with air conditioning system

- Vehicle at room temperature (warmer than + 15 °C)
- Air conditioning system switched on
- Select lowest temperature and highest blower speed

The final control diagnosis activates the following components in the stated sequence:

1. Commencement of injection valve (N108)

2. Exhaust gas recirculation valve (N18)

3. Conditioner compressor interruption

4. Engine codes AEY1), AFN, AHU, ALE:
   Fuel cut-off valve (N109)
   Engine codes AEY2), AHB, AKW:
   Throttle valve positioner (V60)

5. Engine code AEY1):
   Throttle valve positioner (V60)
   Engine codes AEY2), AHB, AKW:
   Fuel cut-off valve (N109)
   Engine codes AFN, AHU, ALE:
   Charge pressure limitation solenoid valve (N75)

6. Glow plug relay (J52)

7. Glow period warning lamp (K29)

8. Low heater output relay (J359)

9. High heater output relay (J360)

10. Blower relay (J323)
    (engine code AFN only)

    1) with MSA 12 engine control unit

    2) with MSA 15 engine control unit

Notes:

- Activation of individual control elements is limited to 30 secs. but can be stopped at any time by pressing the ⇒button.

satelettronica

- The ignition must be switched off before repeating the final control diagnosis.

Work sequence

- Connect fault reader V.A.G 1551 (V.A.G 1552) and select engine electronics control unit with the "Address word" 01. When doing this the engine must be running at idling speed.
  (Connecting fault reader and selecting engine electronics control unit => Page 2 .)

-> Indicated on display:

```
Rapid data transfer      HELP
Select function XX
```

- Operate fault reader taking into account the information on the display:
- Press keys 0 and 3 for the function "Final control diagnosis".

-> Indicated on display:

```
Rapid data transfer      Q
03 Final control diagnosis
```

- Confirm input with Q key.

-> Indicated on display:

```
Final control diagnosis
Commencement of injection valve -N108
```

Activating the valve, influences the noise of combustion considerably (pre-ignition).

If no changes in the combustion noises are heard:

- Check injection adjuster control range
  => Page 103
- Press the ⇒key.

-> Indicated on display:

```
Final control diagnosis
Exhaust gas recirculation valve -N18
```

The valve must click.

Notes:

- Because of engine noises the clicking of the valve cannot be heard and therefore must be felt to detect its operation.
- The piston movement of the mechanical exhaust gas recirculation valve is visible in the side slot.

Valve does not click:

- Check exhaust gas recirculation system

Engine codes AEY, AHB, AKW:

=> Repair group 26; Exhaust gas recirculation system, engine codes 1Y, AEY, AHB, AKW; Checking exhaust gas recirculation Exhaust gas recirculation system, engine codes 1Y, AEY, AHB, AKW Checking exhaust gas recirculation

Engine codes AFN, AHU, ALE:

=> Repair group 26; Exhaust gas recirculation system, engine codes AFN, AHU, ALE; Checking exhaust gas recirculation Exhaust gas recirculation system, engine codes AFN, AHU, ALE Checking exhaust gas recirculation

- Press the ⇒key.

-> Indicated on display:

Protected by copyright. Copying for private or commercial purposes, in part or in whole, is not permitted unless authorised by Volkswagen AG. Volkswagen AG does not guarantee or accept any liability with respect to the correctness of information in this document. Copyright by Volkswagen AG.
satelettronica

```
Final control diagnosis
Conditioner compressor interruption
```

Air conditioner compressor switch-off is checked.

The test step is also recalled on vehicles without air conditioner system.
The conditioner compressor must stop within 5 secs. (visual check) then start approx. every 5 secs. and then stop.

If the conditioner compressor is not switched off:

- Check conditioner compressor cut-off:

=> Current flow diagrams, Electrical fault finding and Fitting locations binder

- Press the ⇒key.

-> Indicated on display for engine codes AEY (engine control unit MSA 12), AFN, AHU, ALE:

```
Final control diagnosis
Fuel cut-off valve -N109
```

The engine must stop.

If the engine does not stop:

- Switch off ignition.
- Unscrew fuel cut-off valve and remove any metal particles or dirt.
- Repeat final control diagnosis and if the engine will not stop replace fuel cut-off valve => Fitting locations overview, Page 46 .
- Continue final control diagnosis with engine stopped and ignition switched on.
- Press the ⇒key.

-> Indicated on display for engine codes AEY (MSA 15 engine control unit), AHB, AKW:

```
Final control diagnosis
Throttle valve positioner-V60
```

The solenoid valve must click.

Note:

The clicking of the valve is difficult to hear and is therefore best checked by touch.

If the valve does not click:

- Check throttle valve positioner (V60) => Page 108 .
- Press the ⇒key.

-> Indicated on display for engine code AEY (MSA 12 engine control unit):

```
Final control diagnosis
Throttle valve positioner-V60
```

The solenoid valve must click.

Note:

The clicking of the valve is difficult to hear and is therefore best checked by touch.

If the solenoid valve does not click:

- Check throttle valve positioner (V60) => Page 108 .
- Press the ⇒key.

-> Indicated on display for engine codes AEY (MSA 15 engine control unit), AHB, AKW:

satelettronica

```
Final control diagnosis
Fuel cut-off valve-N109
```

The engine must stop.

If the engine does not stop:

- Switch off ignition.
- Unscrew fuel cut-off valve and remove any metal particles or dirt.
- Repeat final control diagnosis and if the engine will not stop replace fuel cut-off valve => Fitting locations overview, Page 46 .
- Continue final control diagnosis with engine stopped and ignition switched on.
- Press the ⇒key.

-> Indicated on display for engine codes AFN, AHU, ALE:

```
Final control diagnosis
Charge pressure control solen. valve -
N75
```

The solenoid valve must click.

Note:

The clicking of the valve is difficult to hear and is therefore best checked by touch.

If the solenoid valve does not click:

- Check charge pressure control solenoid valve (N75)

=> Repair group 21; Checking charge air system; Checking charge pressure control Checking charge air system Checking charge pressure control

- Press the ⇒key.

Continued for all engine codes

-> Indicated on display:

```
Final control diagnosis
Glow plug relay -J52
```

The relay must click.
Switching on and off the relay can also be observed as the interior light becomes brighter and darker as a result of the glow plug high power consumption.

If the relay does not click:

- Check glow plug relay:

=> Current flow diagrams, Electrical fault finding and Fitting locations binder

- Press the ⇒key.

-> Indicated on display:

```
Final control diagnosis
Glow period warning lamp -K29
```

The control lamp must blink.

Control lamp does not blink:

- Check glow period warning lamp:

Protected by copyright. Copying for private or commercial purposes, in part or in whole, is not permitted unless authorised by Volkswagen AG. Volkswagen AG does not guarantee or accept any liability with respect to the correctness of information in this document. Copyright by Volkswagen AG.
satelettronica

=> Current flow diagrams, Electrical fault finding and Fitting locations binder

- Press the ⇒key.

-> Indicated on display:

```
Final control diagnosis
Low heater output relay -J359
```

The relay must click.

If the relay does not click:

- Check low heater output relay:

=> Current flow diagrams, Electrical fault finding and Fitting locations binder

- Press the ⇒key.

-> Indicated on display:

```
Final control diagnosis
High heater output relay -J360
```

The relay must click.

If the relay does not click:

- Check high heat output relay:

=> Current flow diagrams, Electrical fault finding and Fitting locations binder

- Press the ⇒key.

-> Indicated on display for engine code AFN:

```
Final control diagnosis
Fan relay -J323
```

The fan must run every 5 seconds and then stop again.

If the fan does not run:

- Check the fan relay:

=> Current flow diagrams, Electrical fault finding and Fitting locations binder

- Press the ⇒key.

-> Indicated on display:

```
Rapid data transfer     HELP
Select function XX
```

- Press keys 0 and 6 for the "End data transfer" function and confirm input with the Q key.
- Switch off ignition.

Protected by copyright. Copying for private or commercial purposes, in part or in whole, is not permitted unless authorised by Volkswagen AG. Volkswagen AG does not guarantee or accept any liability with respect to the correctness of information in this document. Copyright by Volkswagen AG.
satelettronica

4 - Measured value blocks

4.1 - Measured value blocks

4.2 - Safety precautions

Observe following if test and measuring instruments are required during a test drive:

- Test and measuring instruments must be secured to rear seat and operated by a 2nd person from this location.

  If test and measuring instruments are operated from front passenger's seat and the vehicle is involved in an accident, there is a possibility that the person sitting in this seat may receive serious injuries when the airbag is triggered.

4.3 - Reading measured value block

Special tools, workshop equipment, testers, measuring instruments and auxiliary items required

- Fault reader V.A.G 1551 with cable V.A.G 1551/3

Test conditions

- Coolant temperature must be at least 80 °C.
- All electrical consumers like e.g. rear window heating must be switched off.
- If the vehicle is equipped with an air conditioner, this must be switched off.
- On vehicles with an automatic gearbox the selector lever must be in P or N.
- No faults must be stored in fault memory
  => Page 4 , interrogating fault memory

Work sequence

- Connect fault reader V.A.G 1551 (V.A.G 1552) and select engine electronics control unit with the "Address word" 01. When doing this the engine must be running at idling speed.
  (Connecting fault reader and selecting engine electronics control unit => Page 2 .)

-> Indicated on display:

```
Rapid data transfer      HELP
Select function XX
```

- Press keys 0 and 8 for the function "Read measured value block" and confirm entry with Q key.

-> Indicated on display:

```
Read measured value block     HELP
Input display group number XXX
```

Note:

The display group number 001 is an example, to illustrate the sequence.

- Press keys 0, 0 and 1 for "Display group number 1" and confirm entry with Q key.

-> Indicated on display:
(1...4 = Display zones)

```
Read measured value block     1
     1     2     3     4
```

Protected by copyright. Copying for private or commercial purposes, in part or whole, is not permitted unless authorised by Volkswagen AG. Volkswagen AG does not guarantee or accept any liability with respect to the correctness of information in this document. Copyright by Volkswagen AG.
satelettronica

- Press ⇒key.

-> Indicated on display:

```
Rapid data transfer      HELP
Select function XX
```

- Press keys 0 and 6 for the function "End output" and confirm entry with the Q key.

Note:

To change to another display group proceed as follows:

Display group	V.A.G 1551	V.A.G 1552
Higher	Press key 3	Press ↑key
Lower	Press key 1	Press ↓key
Skip	Press key C	Press key C

4.4 - Evaluating measured value block, engine code AEY

Display group 000 at idling speed (engine warm, coolant temperature not below 80 °C)

Display group 000 (decimal displayed value)											
▪ Engine running at idling speed											
Read measured value block 0										[Itrif] Indicated on display	
x	x	x	x	x	x	x	x	x	x		
1	2	3	4	5	6	7	8	9	10	[Itrif] Display zones	Specification
										Displayed value not relevant	not relevant
										Fuel temperature	91...201
										Intake air temperature	182...50
										Coolant temperature	80...35
										Atmospheric pressure	not relevant
										Displayed value not relevant	not relevant
										Injected quantity	11...45
										Accelerator pedal position	0
										Commencement of injection	0...88
										Engine speed	41...45

Display group 001 at idling speed (engine warm, coolant temperature not below 80 °C)

Display group 001 -Injected quantity-						
Read measured value block 1 ⇒				[Itrif] Indicated on display		
xxxx rpm	xx.x mg/H	x.xx V	xxx.x °C			
1	2	3	4	[Itrif] Display zones	Specification	Evaluation
				Coolant temperature	80...110 °C	---
				Modulating piston movement sender voltage	1.40...1.80 V	=> Page 20
				Injected quantity	2.2...9 mg/H	=> Page 19
				Engine speed	861...945 rpm	---

Evaluation: Injected quantity display

V.A.G 1551 display	Possible fault cause	Fault elimination
Below 2.2 mg/H	- Injection pump too rich	- Renew injection pump => Page 61

satelettronica

V.A.G 1551 display	Possible fault cause	Fault elimination
Above 9 mg/H	- Engine too cold - Injection pump too lean	- Run engine at increased speed to warm up and repeat check - Renew injection pump => Page 61

Evaluation: Modulating piston movement sender voltage display

V.A.G 1551 display	Possible fault cause	Fault elimination
Below 1.40 V	- Injection pump too rich	- Renew injection pump => Page 61
Above 1.80 V	- Engine too cold - Injection pump too lean	- Run engine at increased speed to warm up and repeat test - Renew injection pump => Page 61

Display group 002 at idling speed (engine warm, coolant temperature not below 80 °C)

Display group 002 -idling speed-						
Read measured value block 2			⇒	[Itrif] Indicated on display		
xxxx rpm	xxx.x %	xxx	xxx.x °C			
1	2	3	4	[Itrif] Display zones	Specification	Evaluation
				Coolant temperature	80...110 °C	---
			Operating condition		010	=> Page 20
		Accelerator pedal position			0 %	=> Page 20
	Engine speed				861...945 rpm	---

Evaluation: Accelerator pedal position display

V.A.G 1551 display	Possible fault cause	Fault elimination
1...100 %	- Accelerator pedal position sender -G79 incorrectly adjusted or defective	- Check G-79 and if necessary adjust => Repair group 20; removing and installing parts of fuel system; servicing accelerator mechanism servicing accelerator mechanism
	- Wiring open circuit to G79	

Evaluation: Operating condition display

Significance of figures in 3-digit number block for engine operating condition:

Significance when display = 1			
x	x	x	Engine operating condition
		1	Air conditioner compressor switched on
	1		Idling speed switch closed (accelerator pedal position below 17 %)
1			Increased idling speed because air conditioner is switched on

Display group 003 at idling speed (engine warm, coolant temperature not below 80 °C)

Display group 003 -Exhaust gas recirculation-						
Read measured value block 3			⇒	[Itrif] Indicated on display		
xxxx rpm	xxx mg/H	xxx mg/H	xxx %			
1	2	3	4	[Itrif] Display zones	Specification	Evaluation
				Exhaust gas recirculation valve duty cycle MSA 12 engine contr. unit MSA 15 engine contr. unit	90...98 % 4...6 %	---
			Not relevant		0 mg/H	---
		Air mass drawn in (specified)			146 mg/H	---

Volkswagen AG. Volkswagen AG does not guarantee or accept any liability with respect to the correctness of information in this document. Copyright by Volkswagen AG. Protected by copyright. Copying for private or commercial purposes, in part or in whole, is not permitted unless authorised by Volkswagen AG.
satelettronica

Engine speed	861...945 rpm	---

Display group 004 at idling speed (engine warm, coolant temperature not below 80 °C)

Display group 004 -Commencement of injection-						
Read measured value block 4 ⇒				[Itrif] Indicated on display		
xxxx rpm	xx.x ° BTDC	xx.x ° BTDC	xxx %			
1	2	3	4	[Itrif] Display zones	Specification	Evaluation
				Commencement of injection valve duty cycle MSA 12 engine contr. unit MSA 15 engine contr. unit	10...60 % 3...60 %	=> Page 21
				Commencement of injection (actual)	0...5°BTDC	=> Page 21
				Commencement of injection (specified)	0...5°BTDC	=> Page 21
				Engine speed	861...945 rpm	---

Evaluation: Commencement of injection display (specified)

V.A.G 1551 display	Possible fault cause	Fault elimination
Earlier than 5°BTDC	- Engine too cold	- Run engine at increased speed to warm up and repeat check.

Evaluation: Commencement of injection display (specified)

V.A.G 1551 display	Possible fault cause	Fault elimination
Earlier than 5°BTDC	- Engine too cold	- Run engine at increased speed to warm up and repeat check.
	- Injection pump set too "advanced"	- Check and adjust commencement of injection dynamically => Page 66
	- Commencement of injection valve -N108 defective	- Check -N108 => Page 13 , final control diagnosis
Later than 0°ATDC	- Injection pump set extremely "retarded"	- Check and adjust commencement of injection dynamically => Page 66
	- Injection adjustment blocked	- Check -N108 => Page 13 , final control diagnosis
	- Commencement of injection valve -N108 defective	

Evaluation: Commencement of injection valve duty cycle display

V.A.G 1551 display	Possible fault cause	Fault elimination
Above 60 %	- Injection pump set "retarded"	- Check and adjust commencement of injection dynamically => Page 66

Display group 006 with ignition switched on

Display group 006 -Switch positions-						
Read measured value block 6 ⇒				[Itrif] Indicated on display		
xxx km/h	xxx	xxxxxx	xxx			
1	2	3	4	[Itrif] Display zones	Specification	Evaluation
				Cruise control system1)	---	---
				Cruise control system		=> Page 22
				Brake pedal monitor		=> Page 22

satelettronica

Speed	---	---

1) 0 = Vehicles with cruise control system

255 = Vehicles without cruise control system

Evaluation: Brake pedal monitor display

Relevance of figures in 3-digit number block for brake pedal monitor:

Significance when display = 1			
x	x	x	Brake pedal monitor
		1	Brake light switch -F- closed
	1		Brake pedal switch -F-47- open
1			Clutch pedal switch -F36- open

Evaluation: Cruise control system display

Relevance of figures in 6-digit number block for cruise control system:

"1" signifies:						
x	x	x	x	x	x	Cruise control system
					1	Cruise control system switched on
				1		Cruise control and memory switched off
			1			Set speed (SET/FIX button)
		1				Resume/acceleration
	1					Brake pedal operated
1						Clutch pedal operated

Display group 007 with ignition switched on (engine cold and not running)

Display group 007 -Temperatures-						
Read measured value block 7 ⇒				[Itrif] Indicated on display		
xxx.x °C		xxx.x °C	xxx.x °C			
1	2	3	4	[Itrif] Display zones	Specification	Evaluation
				Coolant temperature	Approx. ambient temperature1)	=> Page 23
			Intake air temperature		Approx. ambient temperature1)	=> Page 23
		No display				
	Fuel temperature				Approx. ambient temperature1)	=> Page 22

1) Details of temperature specifications are not possible. When the engine is cold the fuel, intake air and coolant temperatures must equate approximately to ambient temperature. If a temperature deviates noticeably then the relevant sender must be checked.

Evaluation: Fuel temperature display

V.A.G 1551 display	Possible fault cause	Fault elimination
- 5.6 °C	- Short circuit or fuel temperature sender - G81 defective	- Check G81 => Page 92 If a fault is present the measured value block indicates a fuel temperature of -5.6 °C

satelettronica

Protected by copyright. Copying for private or commercial purposes, in part or in whole, is not permitted unless authorised by Volkswagen AG. Volkswagen AG does not guarantee or accept any liability with respect to the correctness of information in this document. Copyright by Volkswagen AG.

Evaluation: Intake air temperature display

V.A.G 1551 display	Possible fault cause	Fault elimination
Approx.19 °C	- Intake air temperature sender -G42 defective	- Check G42 => Page 89 If a fault is present the measured value block indicates a constant intake air temperature of approx.19 °C

Evaluation: Coolant temperature display

V.A.G 1551 display	Possible fault cause	Fault elimination
Large deviation from ambient temperature	- Short circuit or coolant temperature sender -G62 defective	- Check G62 => Page 78 If a fault is present the fuel temperature is displayed alternatively

Display group 013 at idling speed (engine warm, coolant temperature not below 80 °C)

Display group 013 -Idling speed smooth running control-						
Read measured value block 13 x.xx mg/H x.xx mg/H x.xx mg/H			⇒	[Itrif] Indicated on display		
1	2	3	4	[Itrif] Display zones	Specification	Evaluation
				No display		---
			Different quantity injected Cyl.1 and Cyl. 3		- 2.0...+ 2.0 mg/H	=> Page 23
		Different quantity injected Cyl. 2 and Cyl. 3			- 2.0...+ 2.0 mg/H	=> Page 23
	Different quantity injected Cyl. 4 and Cyl. 3				- 2.0...+ 2.0 mg/H	=> Page 23

Evaluation: Idling speed smooth running control display

The injection system is equipped with an idling speed smooth running control. There may be power differences between the individual cylinders (component tolerances, jet drillings, compressions etc.) which are recognised and equalized via selective injected quantities.
Recognition at idling speed is via the signal from the engine speed sender which delivers four signals per crankshaft revolution to the control unit. If the signals are delivered at the same rhythm then all cylinders work the same. If one cylinder is weaker then the crankshaft takes longer for the next half revolution. Conversely a more powerful cylinder accelerates the crankshaft so less time is taken.
If the control unit recognises a difference, then the relevant cylinder is given more or less fuel, until the engine runs evenly again.
The measured value block displays the injected quantity differences of the individual cylinders compared with No. 3 cylinder that is required to ensure an even engine idling speed.
+... mg/H: The relevant cylinder is less powerful than No. 3 cylinder and is therefore supplied with more fuel.
-... mg/H: The relevant cylinder is more powerful than No. 3 cylinder and is therefore supplied with less fuel.

Display group 000 at full throttle (test drive in 3rd gear, coolant temperature not below 80 °C)

Notes:

- When testing, accelerate vehicle at full throttle.
- The measured values must be printed out or read (2nd person required) when the revolutions reach 3,000 rpm.

Display group 000 (decimal displayed value)											
▪ Engine speed 2850...3150 rpm											
Read measured value block 0										[Itrif] Indicated on display	
x	x	x	x	x	x	x	x	x	x		
1	2	3	4	5	6	7	8	9	10	[Itrif] Display zones	Specification
										Displayed value not relevant	not relevant
									Fuel temperature		91...201
								Intake air temperature			182...50

satelettronica

Display group 000 (decimal displayed value)	
Coolant temperature	80...35
Atmospheric pressure	not relevant
Displayed value not relevant	not relevant
Injected quantity	100...1301)
Accelerator pedal position	255
Commencement of injection	120...160
Engine speed	136...150

1) If the control unit recognises a fault, the emergency mode injected quantity of 90 is displayed.

Display group 004 at full throttle (test drive in 3rd gear, coolant temperature not below 80 °C)

Notes:

- When testing, accelerate vehicle at full throttle.
- The measured values must be printed out or read (2nd person required) when the revolutions reach 3,000 rpm.

Display group 004 -Commencement of injection-						
Read measured value block 4 ⇒				[Itrif] Indicated on display		
xxxx rpm	xx.x ° BTDC	xx.x ° BTDC	xxx %			
1	2	3	4	[Itrif] Display zones	Specification	Evaluation
				Duty cycle from commencement of injection valve	60...90 %	=> Page 24
			Commencement of injection (actual)		Approx. Commencement of inj. (specified)	=> Page 24
		Commencement of injection (specified)			6...10°CA BTDC	---
	Engine speed				2850...3150 rpm	---

Evaluation: Commencement of injection display (specified)

V.A.G 1551 display	Possible fault cause	Fault elimination
For large deviation from specified value (approx. 5°CA)	- Commencement of injection valve -N108 defective	- Check -N108 => Page 13 , final control diagnosis
	- Injection pump timing way off	- Check commencement of injection dynamically and adjust => Page 66
	- Air in fuel system	- Check fuel supply system

Evaluation: Duty cycle from commencement of injection valve display

V.A.G 1551 display	Possible fault cause	Fault elimination
Below 60 or above 90 %	- Commencement of injection valve -N108 defective	- Check -N108 => Page 13 , final control diagnosis
		- Check commencement of injection dynamically and adjust => Page 66
		- Check fuel supply system

Protected by copyright. Copyright by Volkswagen AG. Copyright by Volkswagen AG. Volkswagen AG does not guarantee or accept any liability with respect to the correctness of information in this document. Copying or in whole is not permitted unless authorised by Volkswagen AG.
satelettronica

Display group 008 at full throttle (test drive in 3rd gear, coolant temperature not below 80 °C)

Notes:

- When testing, accelerate vehicle at full throttle.
- The measured values must be printed out or read (2nd person required) when the revolutions reach 3,000 rpm.

Display group 008 -Injected quantity limitation-						
Read measured value block 8 ⇒ xxxx rpm xx.x mg/H xx.x mg/H xx.x mg/H				[Itrif] Indicated on display		
1	2	3	4	[Itrif] Display zones	Specification	Evaluation
				Injected quantity limitation (opacity map)	20...26 mg/H	=> Page 25
			Injected quantity limitation (torque map)		24...25 mg/H	=> Page 25
		Injected quantity (driver's requirement)			30...34 mg/H	=> Page 25
	Engine speed				2850...3150 rpm	---

Evaluation: Injected quantity (driver's requirement)

V.A.G 1551 display	Possible fault cause	Fault elimination
Below 30 mg/H	- No full throttle	- Repeat check at full throttle.
	- Accelerator pedal position sender -G79 incorrectly adjusted or defective	- Check G-79 and if necessary adjust => Repair group 20; removing and installing parts of fuel system; servicing accelerator mechanism servicing accelerator mechanism

Evaluation: Injected quantity limitation display (torque map)

V.A.G 1551 display	Possible fault cause	Fault elimination
Below 24 mg/H	- Speed too high or too low	- Read off specified value at 3000 rpm.

Evaluation: Injected quantity limitation display (opacity map)

V.A.G 1551 display	Possible fault cause	Fault elimination
Below 20 mg/H	- Air mass drawn in insufficient	- Check exhaust gas recirculation: => Repair group 26; Exhaust gas recirculation system, engine codes 1Y, AEY, AHB, AKW; Checking exhaust gas recirculation Checking exhaust gas recirculation
	- Exhaust recirculation quantity too high	

Display group 011 at full throttle (test drive in 3rd gear, coolant temperature not below 80 °C)

Notes:

- When testing, accelerate the vehicle at full throttle.
- The measured values must be printed out or read (2nd person required) when the revolutions reach 3,000 rpm.

Display group 011 -Charge pressure control-						
Read measured value block 11 ⇒ xxxx rpm xxxx mbr xxxx mbr xxx %				[Itrif] Indicated on display		
1	2	3	4	[Itrif] Display zones	Specification	Evaluation

satelettronica

			Throttle valve positioner duty cycle MSA 12 engine contr. unit MSA 15 engine contr. unit	94...96 % 4...6 %	---
			No display		
		No display			
	Engine speed			2850...3150 rpm	---

4.5 - Evaluating measured value blocks, engine codes AHB, AKW

Display group 000 at idling speed (engine warm, coolant temperature not below 80 °C)

Display group 000 (decimal displayed value)											
▪ Engine running at idling speed											
Read measured value block 0										[Itrif] Indicated on display	
x	x	x	x	x	x	x	x	x	x		
1	2	3	4	5	6	7	8	9	10	[Itrif] Display zones	Specification
										Displayed value not relevant	255
										Fuel temperature	91...201
										Intake air temperature Engine code AHB Engine code AKW	51...182 138...190
										Coolant temperature	80...35
										Atmospheric pressure	not relevant
										Displayed value not relevant	not relevant
										Injected quantity Engine code AHB Engine code AKW	11...45 11...35
										Accelerator pedal position	0
										Commencement of injection Engine code AHB Engine code AKW	0...88 38...75
										Engine speed	41...45

Display group 001 at idling speed (engine warm, coolant temperature not below 80 °C)

Display group 001 -Injected quantity-						
Read measured value block 1 ⇒				[Itrif] Indicated on display		
xxxx rpm	xx.x mg/H	x.xx V	xxx.x °C			
1	2	3	4	[Itrif] Display zones	Specification	Evaluation
				Coolant temperature	80...110 °C	---
			Voltage from modulating piston movement sender		1.50...2.00 V	=> Page 27
		Injected quantity Engine code AHB Engine code AKW			2.2...9 mg/H 2.2...7 mg/H	=> Page 26
	Engine speed				861...945 rpm	---

Evaluation: Injected quantity display

V.A.G 1551 display	Possible fault cause	Fault elimination
Below 2.2 mg/H	- Injection pump too rich	- Renew injection pump => Page 61
Above 7 mg/H or 9 mg/H	- Engine too cold	- Run engine at increased speed to warm up and repeat check

Protected by copyright. Copying for private or commercial purposes, in part or in whole, is not permitted unless authorised by Volkswagen AG. Volkswagen AG does not guarantee or accept any liability with respect to the correctness of information in this document. Copyright by Volkswagen AG.

satelettronica

	- Injection pump too lean	- Renew injection pump => Page 61

Evaluation: Voltage from modulating piston movement sender display

V.A.G 1551 display	Possible fault cause	Fault elimination
Below 1.50 V	- Injection pump too rich	- Renew injection pump => Page 61
Above 2.00 V	- Engine too cold - Injection pump too lean	- Run engine at increased speed to warm up and repeat test - Renew injection pump => Page 61

Display group 002 at idling speed (engine warm, coolant temperature not below 80 °C)

Display group 002 -idling speed-						
Read measured value block 2			⇒	[Itrif] Indicated on display		
xxxx rpm	xxx.x %	xxx	xxx.x °C			
1	2	3	4	[Itrif] Display zones	Specification	Evaluation
				Coolant temperature	80...110 °C	---
		Operating condition			010	=> Page 27
	Accelerator pedal position				0 %	=> Page 27
Engine speed					861...945 rpm	---

Evaluation: Accelerator pedal display

V.A.G 1551 display	Possible fault cause	Fault elimination
1...100 %	- Accelerator pedal position sender -G79 incorrectly adjusted or defective	- Check G-79 and if necessary adjust => Repair group 20; removing and installing parts of fuel system; servicing accelerator mechanism servicing accelerator mechanism
	- Wiring open circuit to G79	

Evaluation: Operating condition display

Significance of figures in 3-digit number block for engine operating condition:

Significance when display = 1			
x	x	x	Engine operating condition
		1	Air conditioner compressor switched on
	1		Idling speed switch closed (accelerator pedal position below 17 %)
1			Increased idling speed because air conditioner is switched on

Display group 003 at idling speed (engine warm, coolant temperature not below 80 °C)

Display group 003 -Exhaust gas recirculation-						
Read measured value block 3			⇒	[Itrif] Indicated on display		
xxxx rpm	xxx mg/H	xxx mg/H	xxx %			
1	2	3	4	[Itrif] Display zones	Specification	Evaluation
				Exhaust gas recirculation valve duty cycle Engine code AHB Engine code AKW	4...6 % 94...96 %	---
		No display				
	No display					
Engine speed					861...945 rpm	---

satelettronica

Display group 004 at idling speed (engine warm, coolant temperature not below 80 °C)

Display group 004 -Commencement of injection-						
Read measured value block 4 ⇒				[Itrif] Indicated on display		
xxxx rpm	xx.x ° BTDC	xx.x ° BTDC	xxx %			
1	2	3	4	[Itrif] Display zones	Specification	Evaluation
				Commencement of injection valve duty cycle	20...80 %	=> Page 28
			Commencement of injection (actual) Engine code AHB Engine code AKW		0...6°BTDC 0...3°BTDC	=> Page 28
		Commencement of injection (specified) Engine code AHB Engine code AKW			0...6°BTDC 0...3°BTDC	=> Page 28
	Engine speed				861...945 rpm	---

Evaluation: Commencement of injection display (specified)

V.A.G 1551 display	Possible fault cause	Fault elimination
Earlier than 3°BTDC or 6°BTDC	- Engine too cold	- Run engine at increased speed to warm up and repeat check.

Evaluation: Commencement of injection display (actual)

V.A.G 1551 display	Possible fault cause	Fault elimination
Earlier than 3°BTDC or 6°BTDC	- Engine too cold	- Run engine at increased speed to warm up and repeat check.
	- Injection pump set too "advanced"	- Check and adjust commencement of injection dynamically => Page 66
	- Commencement of injection valve -N108 defective	- Check -N108 => Page 13 , final control diagnosis
Later than 0°ATDC	- Injection pump set extremely "retarded"	- Check and adjust commencement of injection dynamically => Page 66
	- Injection adjustment blocked	- Check -N108 => Page 13 , final control diagnosis
	- Commencement of injection valve -N108 defective	

Evaluation: Commencement of injection valve duty cycle display

V.A.G 1551 display	Possible fault cause	Fault elimination
Above 80 %	- Injection pump set "retarded"	- Check and adjust commencement of injection dynamically => Page 66

Display group 006 with ignition switched on

Display group 006 -Switch positions-						
Read measured value block 6 ⇒				[Itrif] Indicated on display		
xxx km/h	xxx	xxxxxx	xxx			
1	2	3	4	[Itrif] Display zones	Specification	Evaluation
				Cruise control system1)	---	---
		Cruise control system				=> Page 29
	Brake pedal monitor					=> Page 29

Protected by copyright. Copying for private or commercial purposes, in part or in whole, is not permitted unless authorised by Volkswagen AG. Volkswagen AG does not guarantee or accept any liability with respect to the correctness of information in this document. Copyright by Volkswagen AG.

satelettronica

Speed	---	---

1) 0 = Vehicles with cruise control system

255 = Vehicles without cruise control system

Evaluation: Brake pedal monitor display

Relevance of figures in 3-digit number block for brake pedal monitor:

Significance when display = 1			
x	x	x	Brake pedal monitor
		1	Brake light switch -F- closed
	1		Brake pedal switch -F-47- open
1			Clutch pedal switch -F36- open

Evaluation: Cruise control system display

Relevance of figures in 6-digit number block for cruise control system:

"1" signifies:						
x	x	x	x	x	x	Cruise control system
					1	Cruise control system switched on
				1		Cruise control and memory switched off
			1			Set speed (SET/FIX button)
		1				Resume/acceleration
	1					Brake pedal operated
1						Clutch pedal operated

Display group 007 with ignition switched on (engine cold and not running)

Display group 007 -Temperatures-						
Read measured value block 7 ⇒				[Itrif] Indicated on display		
xxx.x °C	xxx.x °C	xxx.x °C				
1	2	3	4	[Itrif] Display zones	Specification	Evaluation
				Coolant temperature	Approx. ambient temperature1)	=> Page 30
			Intake air temperature		Approx. ambient temperature1)	=> Page 30
		No display				
	Fuel temperature				Approx. ambient temperature1)	=> Page 29

1) Details of temperature specifications are not possible. When the engine is cold the fuel, intake air and coolant temperatures must equate approximately to ambient temperature. If a temperature deviates noticeably then the relevant sender must be checked.

Evaluation: Fuel temperature display

V.A.G 1551 display	Possible fault cause	Fault elimination
- 5.4 °C	- Short circuit or fuel temperature sender - G81 defective	- Check G81 => Page 92 If a fault is present the measured value block indicates a fuel temperature of -5.4 °C

satelettronica
Protected by copyright. Copyright by Volkswagen AG. Volkswagen AG does not guarantee or accept any liability with respect to the correctness of information in this document. Copyright by Volkswagen AG. Protected by copyright. Copying for private or commercial purposes, in part or in whole, is not permitted unless authorized by Volkswagen AG.

Evaluation: Intake manifold temperature display

V.A.G 1551 display	Possible fault cause	Fault elimination
Approx.136.8 °C or approx. 19 °C	- Intake manifold temperature sender -G42 defective	- Check G42 => Page 89 If a fault is present the measured value block indicates a constant intake manifold temperature of approx.136.8 °C or approx. 19 °C

Evaluation: Coolant temperature display

V.A.G 1551 display	Possible fault cause	Fault elimination
Large deviation from ambient temperature	- Short circuit or coolant temperature sender -G62 defective	- Check G62 => Page 78 If a fault is present the fuel temperature is displayed alternatively

Display group 013 at idling speed (engine warm, coolant temperature not below 80 °C)

Engine code AHB

Display group 013 -Idling speed smooth running control-						
Read measured value block 13 x.xx mg/H x.xx mg/H x.xx mg/H			⇒	[Itrif] Indicated on display		
1	2	3	4	[Itrif] Display zones	Specification	Evaluation
				No display		---
			Different quantity injected Cyl. 1 and Cyl. 3		- 2.0...+ 2.0 mg/H	=> Page 30
		Different quantity injected Cyl. 2 and Cyl. 3			- 2.0...+ 2.0 mg/H	=> Page 30
	Different quantity injected Cyl. 4 and Cyl. 3				- 2.0...+ 2.0 mg/H	=> Page 30

Evaluation: Idling speed smooth running control display

The injection system is equipped with an idling speed smooth running control. There may be power differences between the individual cylinders (component tolerances, jet drillings, compressions etc.) which are recognised and equalized via selective injected quantities.
Recognition at idling speed is via the signal from the engine speed sender which delivers four signals per crankshaft revolution to the control unit. If the signals are delivered at the same rhythm then all cylinders work the same. If one cylinder is weaker then the crankshaft takes longer for the next half revolution. Conversely a more powerful cylinder accelerates the crankshaft so less time is taken.
If the control unit recognises a difference, then the relevant cylinder is given more or less fuel, until the engine runs evenly again.
The measured value block displays the injected quantity differences of the individual cylinders compared with No. 3 cylinder that is required to ensure an even engine idling speed.
+... mg/H: The relevant cylinder is less powerful than No. 3 cylinder and is therefore supplied with more fuel.
-... mg/H: The relevant cylinder is more powerful than No. 3 cylinder and is therefore supplied with less fuel.

Engine code AKW

Display group 013 -Idling speed smooth running control-						
Read measured value block 13 x.xx mg/H x.xx mg/H x.xx mg/H x.xx mg/H			⇒	[Itrif] Indicated on display		
1	2	3	4	[Itrif] Display zones	Specification	Evaluation
				Smooth running control quantity injected Cyl. 4	- 2.0...+ 2.0 mg/H	=> Page 31
			Smooth running control quantity injected Cyl. 3		- 2.0...+ 2.0 mg/H	=> Page 31
		Smooth running control quantity injected Cyl. 2			- 2.0...+ 2.0 mg/H	=> Page 31
	Smooth running control quantity injected Cyl.1				- 2.0...+ 2.0 mg/H	=> Page 31

Copyright by Volkswagen AG. Volkswagen AG does not guarantee or accept any liability with respect to the correctness of information in this document. Copying or distribution to other parties is not permitted without Volkswagen AG's express authorisation. Protected by copyright. Copying for private or commercial purposes, in part or in whole, is not permitted unless authorised by Volkswagen AG. Volkswagen AG does not guarantee or accept any liability with respect to the correctness of information in this document.

satelettronica

Evaluation: Idling speed smooth running control display

The injection system is equipped with an idling speed smooth running control. There may be power differences between the individual cylinders (component tolerances, jet drillings, compressions etc.) which are recognised and equalized via selective injected quantities.
Recognition at idling speed is via the signal from the engine speed sender which delivers four signals per crankshaft revolution to the control unit. If the signals are delivered at the same rhythm then all cylinders work the same. If one cylinder is weaker then the crankshaft takes longer for the next half revolution. Conversely a more powerful cylinder accelerates the crankshaft so less time is taken.
If the control unit recognises a difference, then the relevant cylinder is given more or less fuel, until the engine runs evenly again.
+... mg/H: The respective cylinder is less powerful and is therefore supplied with more fuel.
-... mg/H: The respective cylinder is more powerful and is therefore supplied with less fuel.

Display group 000 at full throttle (test drive in 3rd gear, coolant temperature not below 80 °C)

Notes:

- When testing, accelerate vehicle at full throttle.
- The measured values must be printed out or read (2nd person required) when the revolutions reach 3,000 rpm.

Display group 000 (decimal displayed value)											
▪ Engine speed 2800...3200 rpm											
Read measured value block 0										[ltrif] Indicated on display	
x	x	x	x	x	x	x	x	x	x		
1	2	3	4	5	6	7	8	9	10	[ltrif] Display zones	Specification
										Displayed value not relevant	not relevant
										Fuel temperature	90...201
										Intake air temperature Engine code AHB Engine code AKW	80...180 138...190
										Coolant temperature	80...35
										Atmospheric pressure	not relevant
										Displayed value not relevant	not relevant
										Injected quantity Engine code AHB Engine code AKW	108...120 110...125
										Accelerator pedal position	255
										Commencement of injection Engine code AHB Engine code AKW	119...190 119...150
										Engine speed	133...153

Display group 004 at full throttle (test drive in 3rd gear, coolant temperature not below 80 °C)

Notes:

- When testing, accelerate vehicle at full throttle.
- The measured values must be printed out or read (2nd person required) when the revolutions reach 3,000 rpm.

Display group 004 -Commencement of injection-						
Read measured value block 4 ⇒				[ltrif] Indicated on display		
xxxx rpm	xx.x ° BTDC	xx.x ° BTDC	xxx %			
1	2	3	4	[ltrif] Display zones	Specification	Evaluation

satelettronica
Protected by copyright. Copying for private or commercial purposes is not permitted unless authorised by Volkswagen AG. Volkswagen AG does not guarantee or accept any liability with respect to the correctness of information in this document. Copyright by Volkswagen AG.

			Duty cycle from commencement of injection valve	70...95 %	=> Page 32
			Commencement of injection (actual)	Approx. Commencement of inj. (specified	=> Page 32
		Commencement of injection (specified) Engine code AHB Engine code AKW		6...12°CA BTDC 6...9°CA BTDC	---
	Engine speed			2800...3200 rpm	---

Evaluation: Commencement of injection display (actual)

V.A.G 1551 display	Possible fault cause	Fault elimination
For large deviation from specified value (approx. 5°CA)	- Commencement of injection valve -N108 defective	- Check -N108 => Page 13 , final control diagnosis
	- Injection pump timing way off	- Check commencement of injection dynamically and adjust => Page 66
	- Air in fuel system	- Check fuel supply system

Evaluation: Duty cycle from commencement of injection valve display

V.A.G 1551 display	Possible fault cause	Fault elimination
Below 70 or above 95 %	- Commencement of injection valve -N108 defective	- Check -N108 => Page 13 , final control diagnosis
		- Check commencement of injection dynamically and adjust => Page 66
		- Check fuel supply system

Display group 008 at full throttle (test drive in 3rd gear, coolant temperature not below 80 °C)

Notes:

- When testing, accelerate vehicle at full throttle.
- The measured values must be printed out or read (2nd person required) when the revolutions reach 3,000 rpm.

Display group 008 -Injected quantity limitation-						
Read measured value block 8 ⇒ xxxx rpm xx.x mg/H xx.x mg/H xx.x mg/H				[Itrif] Indicated on display		
1	2	3	4	[Itrif] Display zones	Specification	Evaluation
				Injected quantity limitation (opacity map) Engine code AHB Engine code AKW	21...25 mg/H 22...25 mg/H	=> Page 33
			Injected quantity limitation (torque map) Engine code AHB Engine code AKW		22...24 mg/H 24...25 mg/H	=> Page 33
		Injected quantity (driver's requirement) Engine code AHB Engine code AKW			38...44 mg/H 40...43 mg/H	=> Page 32
	Engine speed				2800...3200 rpm	---

Evaluation: Injected quantity display (driver's requirement)

V.A.G 1551 display	Possible fault cause	Fault elimination
Below 38 mg/H or 40 mg/H	- No full throttle	- Repeat check at full throttle.

satelettronica

	- Accelerator pedal position sender -G79 incorrectly adjusted or defective	- Check G-79 and if necessary adjust => Repair group 20; removing and installing parts of fuel system; servicing accelerator mechanism servicing accelerator mechanism

Evaluation: Injected quantity limitation display (torque map)

V.A.G 1551 display	Possible fault cause	Fault elimination
Below 22 mg/H or 24 mg/H	- Speed too high or too low	- Read off specified value at 3000 rpm.

Evaluation: Injected quantity limitation display (opacity map)

V.A.G 1551 display	Possible fault cause	Fault elimination
Below 21 mg/H or 22 mg/H	- Atmospheric pressure sensor in control unit defective	- Renew Diesel direct injection system control unit (J248) => Page 117
	- Intake air temperature sender -G42 defective	- Check G42 => Page 89

Display group 011 at full throttle (test drive in 3rd gear, coolant temperature not below 80 °C)

Notes:

- When testing, accelerate the vehicle at full throttle.
- The measured values must be printed out or read (2nd person required) when the revolutions reach 3,000 rpm.

Display group 011 -Charge pressure control-						
Read measured value block 11 ⇒				[Itrif] Indicated on display		
xxxx rpm	xxxx mbr	xxxx mbr	xxx %			
1	2	3	4	[Itrif] Display zones	Specification	Evaluation
				Duty cycle from throttle valve positioner	4...6 %	---
			No display			
		No display				
	Engine speed				2800...3200 rpm	---

4.6 - Evaluating measured value blocks, engine codes AFN, AHU, ALE

Display group 000 at idling speed (engine warm, coolant temperature not below 80 °C)

Display group 000 (decimal displayed value)												
▪ Engine running at idling speed												
Read measured value block 0										[Itrif] Indicated on display		
x	x	x	x	x	x	x	x	x	x			
1	2	3	4	5	6	7	8	9	10	[Itrif] Display zones	Specification	Corresponds to
										Air mass1)	69...128	230...420 mg/H
									Fuel temperature		91...201	20...80°C
								Intake manifold temperature			182...51	10...100°C
							Coolant temperature				80...35	80...110°C
						Atmospheric pressure					Not relevant	---
					Intake manifold pressure						Not relevant	---
				Injected quantity							11...45	2.2...9 mg/H

satelettronica

Display group 000 (decimal displayed value)		
Accelerator pedal position	0	0 %
Commencement of injection Engine code AFN Engine code AHU Engine code ALE	50... 100 0... 88 25...100	1°...5°BTDC 3°after...4°BTDC 1°after...5°BTDC
Engine speed	41...45	861...945 rpm

1) The measured values are only valid when the exhaust gas recirculation (EGR) is switched on. The EGR is switched off after approx. 3 minutes at idling speed, therefore give burst on throttle or restart engine.

Display group 001 at idling speed (engine warm, coolant temperature not below 80 °C)

Display group 001 -Injected quantity-						
Read measured value block 1 ⇒				[Itrif] Indicated on display		
xxxx rpm	xx.x mg/H	x.xx V	xxx.x °C			
1	2	3	4	[Itrif] Display zones	Specification	Evaluation
				Coolant temperature	80...110 °C	---
			Modulating piston movement sender voltage Engine code AFN, ALE Engine code AHU		1.30...1.90 V 1.25...1.70 V	=> Page 34
		Injected quantity			2.2...9 mg/H	=> Page 34
	Engine speed				861...945 rpm	---

Evaluation: Injected quantity display

V.A.G 1551 display	Possible fault cause	Fault elimination
Below 2.2 mg/H	- Injection pump too rich	- Renew injection pump => Page 61
Above 9 mg/H	- Engine too cold - Injection pump too lean	- Run engine at increased speed to warm up and repeat check - Renew injection pump => Page 61

Evaluation: Modulating piston movement sender voltage display

V.A.G 1551 display	Possible fault cause	Fault elimination
Below 1.25 V or 1.30 V	- Injection pump too rich	- Renew injection pump => Page 61
Above 1.70 V	- Engine too cold - Injection pump too lean	- Run engine at increased speed to warm up and repeat test - Renew injection pump => Page 61

Display group 002 at idling speed (engine warm, coolant temperature not below 80 °C)

Display group 002 -idling speed-						
Read measured value block 2 ⇒				[Itrif] Indicated on display		
xxxx rpm	xxx.x %	xxx	xxx.x °C			
1	2	3	4	[Itrif] Display zones	Specification	Evaluation
				Coolant temperature	80...110 °C	---
			Operating condition		010	=> Page 35
		Accelerator pedal position			0 %	=> Page 34
	Engine speed				861...945 rpm	---

Evaluation: Accelerator pedal position display

V.A.G 1551 display	Possible fault cause	Fault elimination

Copyright Volkswagen AG. Volkswagen AG does not guarantee or accept any liability with respect to the correctness of information in this document. Copyright by Volkswagen AG. Technical data is compiled for internal use only and for authorised Volkswagen AG partners. Reproduction, in part or in whole, is not permitted unless authorised by Volkswagen AG. Volkswagen AG does not guarantee or accept any liability with respect to the correctness of information in this document. Copyright by Volkswagen AG.

satelettronica

1...100 %	- Accelerator pedal position sender -G79 incorrectly adjusted or defective	- Check G-79 and if necessary adjust => Repair group 20; removing and installing parts of fuel system; servicing accelerator mechanism servicing accelerator mechanism
	- Wiring open circuit to G79	

Evaluation: Operating condition display

Significance of figures in 3-digit number block for engine operating condition:

Significance when display = 1			
x	x	x	Engine operating condition
		1	Air conditioner compressor switched on
	1		Idling switch closed
1			Increased idling speed because air conditioner is switched on

Display group 003 at idling speed (engine warm, coolant temperature not below 80 °C)

Display group 003 -Exhaust gas recirculation-						
Read measured value block 3 ⇒ xxxx rpm xxx mg/H xxx mg/H xxx %				[Itrif] Indicated on display		
1	2	3	4	[Itrif] Display zones	Specification	Evaluation
				Duty cycle from exhaust gas recirculation valve Engine code AFN Engine code AHU Engine code ALE	30...80 % 40...60 % 30...80 %	---
				Air mass drawn in (actual)	230...420 mg/H	=> Page 35
		Air mass drawn in (specified)			230...370 mg/H	=> Page 35
	Engine speed				861...945 rpm	---

Evaluation: Air mass drawn in (specified) display

V.A.G 1551 display	Possible fault cause	Fault elimination
Above 370 mg/H	- Engine too cold	- Run engine at increased speed to warm up and repeat check.

Evaluation: Air mass drawn in (actual) display

V.A.G 1551 display	Possible fault cause	Fault elimination
Below 230 mg/H	- Excessive exhaust gas recirculation	- Check exhaust gas recirculation: => Repair group 26; exhaust gas recirculation system engine codes AFN, AHU, ALE; Checking exhaust gas recirculation Checking exhaust gas recirculation
	- Unmetered air	- Check intake air system for leaks.
Above 420 mg/H	- Engine too cold	- Run engine at increased speed to warm up and repeat check.
	- Insufficient exhaust gas recirculation	- Engine running at idling speed for 3 mins., give burst on throttle.
	- Air mass meter -G70 defective	- Check exhaust gas recirculation and air mass meter function => Page 111 If a fault is present the measured value block indicates a constant air mass value of approx. 550 mg/H over the complete rpm and load range.

Protected by copyright. Copyright by Volkswagen AG. Volkswagen AG does not guarantee or accept any liability with respect to the correctness of information. Copying for private or commercial purposes, in part or in whole, is not permitted unless authorised by Volkswagen AG.
satelettronica

Display group 004 at idling speed (engine warm, coolant temperature not below 80 °C)

Display group 004 -Commencement of injection-						
Read measured value block 4 ⇒				[Itrif] Indicated on display		
xxxx rpm	xx.x ° B/ATDC	xx.x ° B/ATDC	xxx %			
1	2	3	4	[Itrif] Display zones	Specification	Evaluation
				Commencement of injection valve duty cycle Engine code AFN Engine code AHU Engine code ALE	2...80 % 2...95 % 2...80 %	---
				Commencement of injection (actual) Engine code AFN Engine code AHU Engine code ALE	1°...5°BTDC 3°ATDC...4°BTDC 1°ATDC...5°BTDC	=> Page 36
				Commencement of injection (specified) Engine code AFN Engine code AHU Engine code ALE	1°...5°BTDC 3°ATDC...4°BTDC 1°ATDC...5°BTDC	=> Page 36
				Engine speed	861...945 rpm	---

Evaluation: Commencement of injection (specified) display

V.A.G 1551 display	Possible fault cause	Fault elimination
Earlier than 4°BTDC or 5°BTDC	- Engine too cold	- Run engine at increased speed to warm up and repeat check.

Evaluation: Commencement of injection display (actual)

V.A.G 1551 display	Possible fault cause	Fault elimination
Earlier than 4°BTDC or 5°BTDC	- Engine too cold	- Run engine at increased speed to warm up and repeat check.
	- Injection pump set too "advanced"	- Check and adjust commencement of injection dynamically => Page 66
	- Commencement of injection valve -N108 defective	- Check -N108 => Page 13 , final control diagnosis
Later than 3°ATDC or 1°ATDC or 1°BTDC	- Injection pump set extremely "retarded"	- Check and adjust commencement of injection dynamically => Page 66
	- Injection adjustment blocked	- Check -N108 => Page 13 , final control diagnosis
	- Commencement of injection valve -N108 defective	

Display group 005

The values displayed are not relevant for fault finding within the service department.

Display group 005 -Starting conditions-						
Read measured value block 5 ⇒				[Itrif] Indicated on display		
xxxx rpm	xx.x mg/H	xx.x ° B/ATDC	xxx.x °C			
1	2	3	4	[Itrif] Display zones	Specification	Evaluation
				Coolant temperature	---	---
				Commencement of injection (actual)	---	---
				Starting quantity	---	---

satelettronica

Protected by copyright. Copyright by Volkswagen AG. Volkswagen AG does not make any representation or warranty with respect to the correctness of information in this document. Copying for private or commercial purposes, in part or in whole, is not permitted unless authorised by Volkswagen AG.

Engine speed	---	---

Display group 006 with ignition switched on

Display group 006 -Switch positions-						
Read measured value block 6			⇒	[Itrif] Indicated on display		
xxx km/h	xxx	xxxxxx	xxx			
1	2	3	4	[Itrif] Display zones	Specification	Evaluation
				Cruise control system1)	---	---
			Cruise control system			=> Page 37
		Brake pedal monitor				=> Page 37
	Speed				---	---

1) 0 = Vehicles with cruise control system

255 = Vehicles without cruise control system

Evaluation: Brake pedal monitor display

Significance of figures in 3-digit number block for brake pedal monitor:

Significance when display = 1			
x	x	x	Brake pedal monitor
		1	Brake light switch -F- closed
	1		Brake pedal switch -F-47- open
1			Clutch pedal switch -F36- open

Evaluation: Cruise control system display

Significance of figures in 6-digit number block for cruise control system:

Significance when display = 1						
x	x	x	x	x	x	Cruise control system
					1	Cruise control system switched on
				1		Cruise control and memory switched off
			1			Set speed (SET/FIX button)
		1				Resume/acceleration
	1					Brake pedal operated
1						Clutch pedal operated

Display group 007 with ignition switched on (engine cold and not running)

Display group 007 -Temperatures-						
Read measured value block 7			⇒	[Itrif] Indicated on display		
xxx.x °C		xxx.x °C	xxx.x °C			
1	2	3	4	[Itrif] Display zones	Specification	Evaluation
				Coolant temperature	Approx. ambient temperature1)	---
			Intake manifold temperature		Approx. ambient temperature1)	=> Page 38
		No display				

satelettronica

Fuel temperature	Approx. ambient temperature1)	=> Page 38

1) Details of temperature specifications are not possible. When the engine is cold the fuel, intake air and coolant temperatures must equate approximately to ambient temperature. If a temperature deviates noticeably then the relevant sender must be checked.

Evaluation: Fuel temperature display

V.A.G 1551 display	Possible fault cause	Fault elimination
- 5.4 °C	- Short circuit or fuel temperature sender - G81 defective	- Check G81 => Page 92 If a fault is present the measured value block indicates a fuel temperature of -5.4 °C

Evaluation: Intake manifold temperature display

V.A.G 1551 display	Possible fault cause	Fault elimination
Approx.136.8 °C	- Intake manifold temperature sender -G72 defective	- Check G72 => Page 86 If a fault is present the measured value block indicates a constant intake manifold temperature of approx.136.8 °C

Evaluation: Coolant temperature display

V.A.G 1551 display	Possible fault cause	Fault elimination
Large deviation from ambient temperature	- Short circuit or coolant temperature sender -G62 defective	- Check G62 => Page 78 If a fault is present the fuel temperature is displayed alternatively

Display group 009

The values displayed are not relevant for fault finding within the service department.

Display group 009 -Injected quantity limitation-						
Read measured value block 9			⇒	[Itrif] Indicated on display		
xxxx rpm xx.x mg/H xx.x mg/H			x.xx V			
1	2	3	4	[Itrif] Display zones	Specification	Evaluation
				Modulating piston movement sender voltage	---	---
			Injected quantity limitation from automatic gearbox during gear change		---	---
		Injected quantity (cruise control system active)			---	---
	Engine speed				---	---

Display group 012

The values displayed are not relevant for fault finding within the service department.

Display group 012 -Glow plug system-						
Read measured value block 12			⇒	[Itrif] Indicated on display		
xxxx	xx.xx sec.	xx.x V	xxx.x °C			
1	2	3	4	[Itrif] Display zones	Specification	Evaluation
				Coolant temperature	---	---
			Supply voltage from control unit		---	---
		Pre-glow period			---	---
	Not relevant					

Protected by copyright. Copyright by Volkswagen AG. Volkswagen AG does not guarantee or accept any liability with respect to the correctness of information in this document. Copyright by Volkswagen AG. Reproduction in whole or in part or in any other form or medium for commercial purposes is permitted unless authorised by Volkswagen AG.
satelettronica

Display group 013 at idling speed (engine warm, coolant temperature not below 80 °C)

Display group 013 -Idling speed smooth running control-						
Read measured value block 13 ⇒ x.xx mg/H x.xx mg/H x.xx mg/H				[Itrif] Indicated on display		
1	2	3	4	[Itrif] Display zones	Specification	Evaluation
				No display		---
			Different quantity injected Cyl. 1 and Cyl. 3		- 2.0...+ 2.0 mg/H	=> Page 39
		Different quantity injected Cyl. 2 and Cyl. 3			- 2.0...+ 2.0 mg/H	=> Page 39
	Different quantity injected Cyl. 4 and Cyl. 3				- 2.0...+ 2.0 mg/H	=> Page 39

Evaluation: Idling speed smooth running control display

The injection system is equipped with an idling speed smooth running control. There may be power differences between the individual cylinders (component tolerances, jet drillings, compressions etc.) which are recognised and equalized via selective injected quantities.
Recognition at idling speed is via the signal from the engine speed sender which delivers four signals per crankshaft revolution to the control unit. If the signals are delivered at the same rhythm then all cylinders work the same. If one cylinder is weaker then the crankshaft takes longer for the next half revolution. Conversely a more powerful cylinder accelerates the crankshaft so less time is taken.
If the control unit recognises a difference, then the relevant cylinder is given more or less fuel, until the engine runs evenly again.
The measured value block displays the injected quantity differences of the individual cylinders compared with No. 3 cylinder that is required to ensure an even engine idling speed.
+... mg/H: The relevant cylinder is less powerful than No. 3 cylinder and is therefore supplied with more fuel.
-... mg/H: The relevant cylinder is more powerful than No. 3 cylinder and is therefore supplied with less fuel.

Display group 015

The values displayed are not relevant for fault finding within the service department.

Display group 015 -Fuel consumption-						
Read measured value block 15 ⇒ xxxx rpm xx.x mg/H xx.xx l/h xx.x mg/H				[Itrif] Indicated on display		
1	2	3	4	[Itrif] Display zones	Specification	Evaluation
				Injection quantity requirement (driver's requirement via accelerator pedal)	---	---
			Fuel consumption		---	---
		Injection quantity (actual)			---	---
	Engine speed				---	---

Display group 016 at idling

Display group 016 -Additional heater-						
Read measured value block 16 ⇒ xxx % xxxxxxxx xx xx.x V				[Itrif] Indicated on display		
1	2	3	4	[Itrif] Display zones	Specification	Evaluation
				Voltage supply from control unit	---	---
			Activation of heater elements			=> Page 40
		Additional heater				=> Page 40
	Alternator loading				---	---

satelettronica

Evaluation: Additional heater display

Significance of figures in 8-digit number block for additional heater:

Significance when display = 1								
x	x	x	x	x	x	x	x	Additional heater switched off, because:
							1	Coolant temperature more than 70 °C...80 °C or intake air temperature more than + 5 °C
						1		Alternator defective
					1			Battery voltage below 9 V
				1				Engine speed below 760 rpm
			1					Engine start within last 10 secs.
		1						Coolant temperature sender -G62 or intake manifold temperature sender -G72 defective
	1							Not relevant
1								Not relevant

Evaluation: Heater element activation display

Significance of figures in 2-digit number block for heater element activation:

Significance when display = 1		
x	x	Heater element activation
	1	Low heat output relay -J359 on
1		High heat output relay -J360 on

Display group 000 at full throttle (test drive in 3rd gear, coolant temperature not below 80 °C)

Notes:

- When testing, accelerate vehicle at full throttle.
- The measured values must be printed out or read (2nd person required) when the revolutions reach 3,000 rpm.

Display group 000 (decimal displayed value)												
▪ Engine speed 2800...3200 rpm												
Read measured value block 0										[Itrif] Indicated on display		
x	x	x	x	x	x	x	x	x	x			
1	2	3	4	5	6	7	8	9	10	[Itrif] Display zones	Specification	Corresponds to
										Air mass	225...255	750...890 mg/H
										Fuel temperature	91...201	20...80°C
										Intake manifold temperature Engine code AFN Engine code AHU Engine code ALE	51...182 80...180 51...190	10...100°C 10...80°C 5...100°C
										Coolant temperature	80...35	80...110°C
										Atmospheric pressure	Not relevant	---
										Intake manifold pressure	158...194	1650...2000 mbar
										Injected quantity Engine code AFN Engine code AHU, ALE	180...210 160...190	36...42 mg/H 32...38 mg/H
										Accelerator pedal position	255	100 %

satelettronica

Display group 000 (decimal displayed value)		
Commencement of injection Engine codes AFN, ALE Engine code AHU	137...213 135...165	8...14°BTDC 7.8...10.2°BTDC
Engine speed	130...155	2800..3200 rpm

Display group 004 at full throttle (test drive in 3rd gear, coolant temperature not below 80 °C)

Notes:

- When testing, accelerate vehicle at full throttle.
- The measured values must be printed out or read (2nd person required) when the revolutions reach 3,000 rpm.

Display group 004 -Commencement of injection-						
Read measured value block 4 ⇒				[Itrif] Indicated on display		
xxxx rpm	xx.x ° B/ATDC	xx.x ° B/ATDC	xxx %			
1	2	3	4	[Itrif] Display zones	Specification	Evaluation
				Duty cycle from commencement of injection valve	70...95 %	=> Page 41
				Commencement of injection (actual)	Approx. Commencement of inj. (specified	=> Page 41
				Commencement of injection (specified) Engine codes AFN, ALE Engine code AHU	8...14°BTDC 6...12°BTDC	---
				Engine speed	2800...3200 rpm	---

Evaluation: Commencement of injection (actual) display

V.A.G 1551 display	Possible fault cause	Fault elimination
For large deviation from specified value (approx. 5°)	- Commencement of injection valve -N108 defective	- Check -N108 => Page 13 , final control diagnosis
	- Injection pump timing way off	- Check commencement of injection dynamically and adjust => Page 66
	- Air in fuel system	- Check fuel supply system

Evaluation: Duty cycle from commencement of injection valve display

V.A.G 1551 display	Possible fault cause	Fault elimination
Below 70 or above 95 %	- Commencement of injection valve -N108 defective	- Check -N108 => Page 13 , final control diagnosis
		- Check commencement of injection dynamically and adjust => Page 66
		- Check fuel supply system

Display group 008 at full throttle (test drive in 3rd gear, coolant temperature not below 80 °C)

Notes:

- When testing, accelerate vehicle at full throttle.
- The measured values must be printed out or read (2nd person required) when the revolutions reach 3,000 rpm.

Display group 008 -Injected quantity limitation-	
Read measured value block 8 ⇒	[Itrif] Indicated on display

Protected by copyright. Copying for private or commercial purposes, in part or in whole, is not permitted unless authorised by Volkswagen AG. Volkswagen AG does not guarantee or accept any liability with respect to the correctness of information in this document.
satelettronica

xxxx rpm	xx.x mg/H	xx.x mg/H	xx.x mg/H			
1	2	3	4	[Itrif] Display zones	Specification	Evaluation
				Injected quantity limitation due to air mass drawn in (smoke prevention) Engine code AFN Engine code AHU Engine code ALE	36...44 mg/H 34...40 mg/H 34...38 mg/H	=> Page 42
				Injected quantity limitation via revs. (torque limitation) Engine code AHU Engine code AHU Engine code ALE	41...42 mg/H 34...40 mg/H 37...38 mg/H	=> Page 42
				Injected quantity (driver's requirement) Engine code AFN Engine code AHU, ALE	42...44 mg/H 38...42 mg/H	=> Page 42
				Engine speed	2800...3200 rpm	---

Evaluation: Injected quantity (driver's requirement) display

V.A.G 1551 display	Possible fault cause	Fault elimination
Below 38 mg/H or 42 mg/H	- No full throttle	- Repeat check at full throttle.
	- Accelerator pedal position sender -G79 incorrectly adjusted or defective	- Check G-79 and if necessary adjust => Repair group 20; removing and installing parts of fuel system; servicing accelerator mechanism servicing accelerator mechanism

Evaluation: Injected quantity limitation via revs. (torque limitation) display

V.A.G 1551 display	Possible fault cause	Fault elimination
Below min. value	- Revs. too high or too low	- Read off specified value at 3000 rpm.

Evaluation: Injection quantity limitation due to air mass drawn in (smoke prevention) display

V.A.G 1551 display	Possible fault cause	Fault elimination
Below min. value	- Air mass drawn in insufficient	- Check exhaust gas recirculation and air mass meter function => Page 111
	- Exhaust recirculation quantity too high	- Check exhaust gas recirculation => Repair group 26; exhaust gas recirculation system engine codes AFN, AHU, ALE; Checking exhaust gas recirculation Checking exhaust gas recirculation

Display group 010 at full throttle (test drive in 3rd gear, coolant temperature not below 80 °C)

Notes:

- When testing, accelerate the vehicle at full throttle.
- The measured values must be printed out or read (2nd person required) when the revolutions reach 3,000 rpm.

Display group 010 -Air quantities-						
Read measured value block 10			⇒	[Itrif] Indicated on display		
xxx mg/H	xxxx mbr	xxxx mbr	xxx.x %			
1	2	3	4	[Itrif] Display zones	Specification	Evaluation
				Accelerator pedal position	100 %	=> Page 43

Protected by copyright. Copying for private or commercial purposes, in part or in whole, is not permitted unless authorised by Volkswagen AG. Volkswagen AG does not guarantee or accept any liability with respect to the correctness of information in this Copyright by Volkswagen AG.
satelettronica

		Intake manifold pressure (charge pressure)	1650...2000 mbar	=> Page 43
		Atmospheric pressure (ambient pressure)	No specification	---
	Air mass drawn in Engine codes AFN, ALE Engine code AHU		750...890 mg/H 800...898 mg/H	=> Page 43

Evaluation: Air mass drawn in display

V.A.G 1551 display	Possible fault cause	Fault elimination
Below 800 mg/H or 750 mg/H	- Revs. too low or too high	- Read off specified value at 3000 rpm.
	- Charge pressure too low	- Check charge pressure control => Repair group 21; check charge air system; checking exhaust gas turbocharger checking exhaust gas turbocharger
	- Air mass meter defective	- Check exhaust gas recirculation and air mass meter function => Page 111 If a fault is present the measured value block indicates a constant air mass value of approx. 550 mg/H over total speed and load range

Evaluation: Intake manifold pressure (charge pressure) display

V.A.G 1551 display	Possible fault cause	Fault elimination
Below 1650 mbar	- Charge pressure control defective	- Check charge pressure control => Repair group 21; check charge air system; checking exhaust gas turbocharger checking exhaust gas turbocharger
Above 2000 mbar	- Turbocharger defective	

Evaluation: Accelerator pedal position display

V.A.G 1551 display	Possible fault cause	Fault elimination
Below 100 %	- No full throttle	- Repeat test at full throttle.
	- Accelerator pedal position sender -G79 incorrectly adjusted or defective	- Check G-79 and if necessary adjust => Repair group 20; removing and installing parts of fuel supply system; servicing accelerator mechanism servicing accelerator mechanism

Display group 011 at full throttle (test drive in 3rd gear, coolant temperature not below 80 °C)

Notes:

- When testing, accelerate the vehicle at full throttle.
- The measured values must be printed out or read (2nd person required) when the revolutions reach 3,000 rpm.

Display group 011 -Charge pressure control-						
Read measured value block 11 ⇒				[ltrif] Indicated on display		
xxxx rpm	xxxx mbr	xxxx mbr	xxx %			
1	2	3	4	[ltrif] Display zones	Specification	Evaluation
				Duty cycle from charge pressure control valve	20...70 %	---
			Charge pressure (actual)		1650...2000 mbar	=> Page 44
		Charge pressure (specified)			1650...1950 mbar	---
	Engine speed				2800...3200 rpm	---

Protected by copyright. Copying for private or commercial purposes, in part or in whole, is not permitted unless authorised by Volkswagen AG. Volkswagen AG does not guarantee or assume any liability with respect to the correctness of information in this document. Copyright by Volkswagen AG

satelettronica

Protected by copyright. Copying for private or commercial purposes, in part or in whole, is not permitted unless authorised by Volkswagen AG. Volkswagen AG does not guarantee or accept any liability with respect to the correctness of information in this document. Copyright by Volkswagen AG.

Evaluation: Charge pressure display (actual)

V.A.G 1551 display	Possible fault cause	Fault elimination
Below 1650 mbar	- Charge pressure control defective	- Check charge pressure control => Repair group 21; check charge air system; checking exhaust gas turbocharger checking exhaust gas turbocharger
	- Turbocharger defective	
	- Charge pressure hose not connected to control unit	- Connect charge pressure hose
Above 2000 mbar	- Turbocharger defective	- Check charge pressure control => Repair group 21; check charge air system; checking turbocharger checking turbocharger

satelettronica

23 - Mixture preparation, Injection

Protected by copyright. Copying for private or commercial purposes, in part or in whole, is not permitted unless authorised by Volkswagen AG. Copyright by Volkswagen AG. ... does not guarantee or accept any liability with respect to the correctness of information in this document.

1 - Servicing Diesel direct injection system

1.1 - Servicing Diesel direct injection system

Diesel is drawn from the fuel tank by the distributor injection pump, pressurised, and then sprayed into the combustion chamber onto the crown of the piston by the injector.

The quantity injected is regulated electronically by the Diesel direct injection system control unit. The electronic regulation allows the quantity injected and the injection characteristics, commencement of injection and exhaust gas recirculation, to be regulated flexibly to meet requirements.

The Diesel direct injection system control unit is equipped with a fault memory. Before starting repairs, adjustments and fault finding, the fault memory must be interrogated and final control diagnosis completed =>Page 4 .

Note:

When performing check and adjustment operations the control unit may recognized and store faults.

For this reason after completing all check and adjustment operations it is necessary to erase fault memory

=>Page 12 .

1.2 - Safety precautions

To prevent injuries to persons and/or damage to the injection and glow plug system, the following must be noted:

- The ignition must be switched off before connecting or disconnecting injection or glow plug system wiring or tester cables.
- If the engine is to be turned at starter speed, without starting, e.g. when checking compressions, pull connector off fuel cut-off valve (N109) on injection pump.
- Before disconnecting battery, obtain radio code for radios fitted with anti-theft coding.
- Disconnecting and connecting the battery must only be undertaken when the ignition switched off otherwise the Diesel direct injection system control unit may be damaged.

Observe following if test and measuring instruments are required during a test drive:

- Test and measuring instruments must be secured to rear seat and operated by a 2nd person from this location.

  If test and measuring instruments are operated from front passenger's seat and the vehicle is involved in an accident, there is a possibility that the person sitting in this seat may receive serious injuries when the airbag is triggered.

1.3 - Rules for cleanliness

When working on the fuel supply/injection system, pay careful attention to the following "5 rules":

- Thoroughly clean all unions and the adjacent areas before disconnecting.
- Place parts that have been removed on a clean surface and cover. Do not use fluffy cloths!
- Carefully cover opened components or seal, if the repair cannot be carried out immediately.

satelettronica

- Only install clean components:
  Only unpack replacement parts immediately prior to installation.
  Do not use parts that have been stored loose (e.g. in tool boxes etc.).
- When the system is open:
  Do not work with compressed air if this can be avoided.
  Do not move vehicle unless absolutely necessary.
- Also ensure that no Diesel fuel runs onto the coolant hoses. If necessary hoses must be cleaned immediately. Affected hoses must be replaced.

1.4 - Fitting locations overview

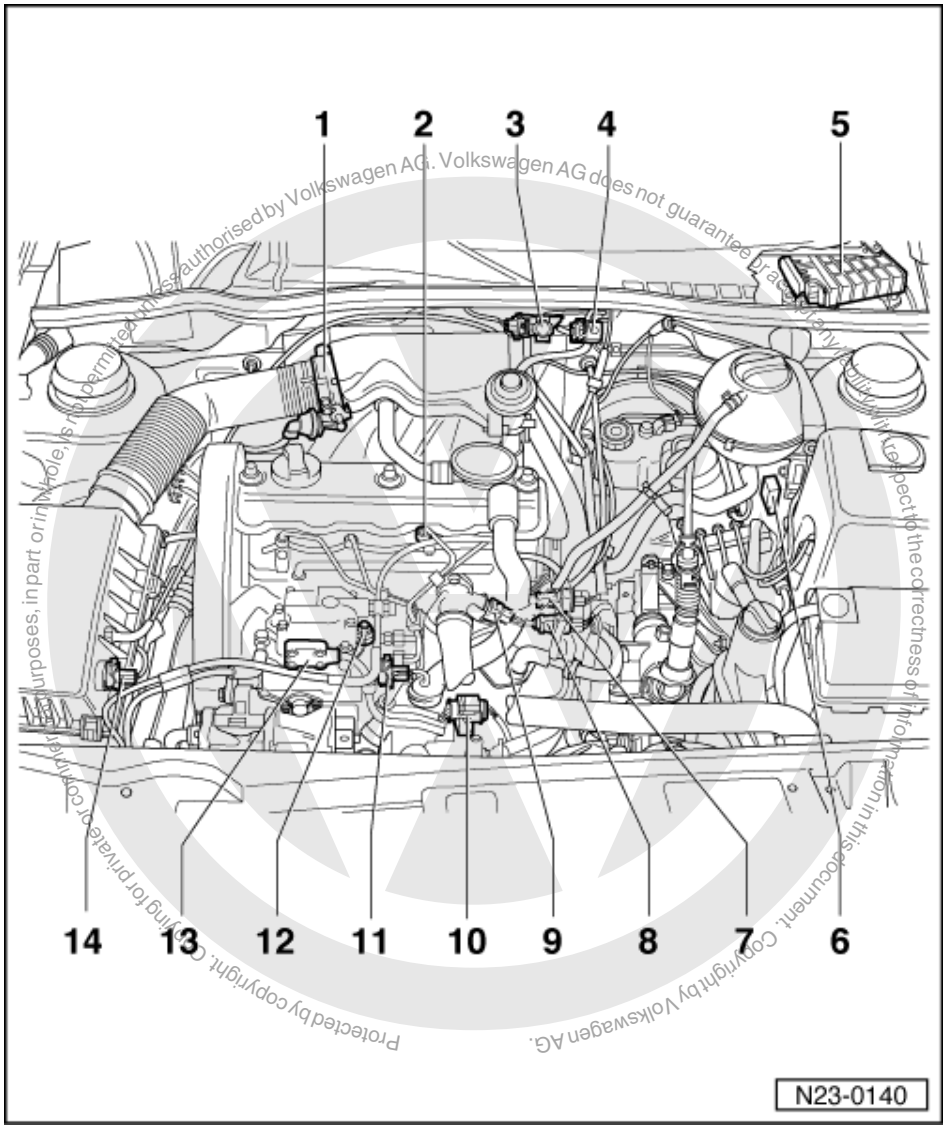

Components A to D are not shown on the illustration.

A - Brake pedal switch (F)
- In footwell => Page 58 , Fig. 1

B - Brake light switch (F47)
- In footwell => Page 58 , Fig. 1

C - Accelerator pedal position sender (G79)
- In footwell on accelerator

satelettronica

=> Repair group 20; removing and installing parts of fuel supply system; servicing accelerator mechanism removing and installing parts of fuel supply system servicing accelerator mechanism

D - Clutch pedal switch (F36)

- In footwell => Page 58 , Fig. 1

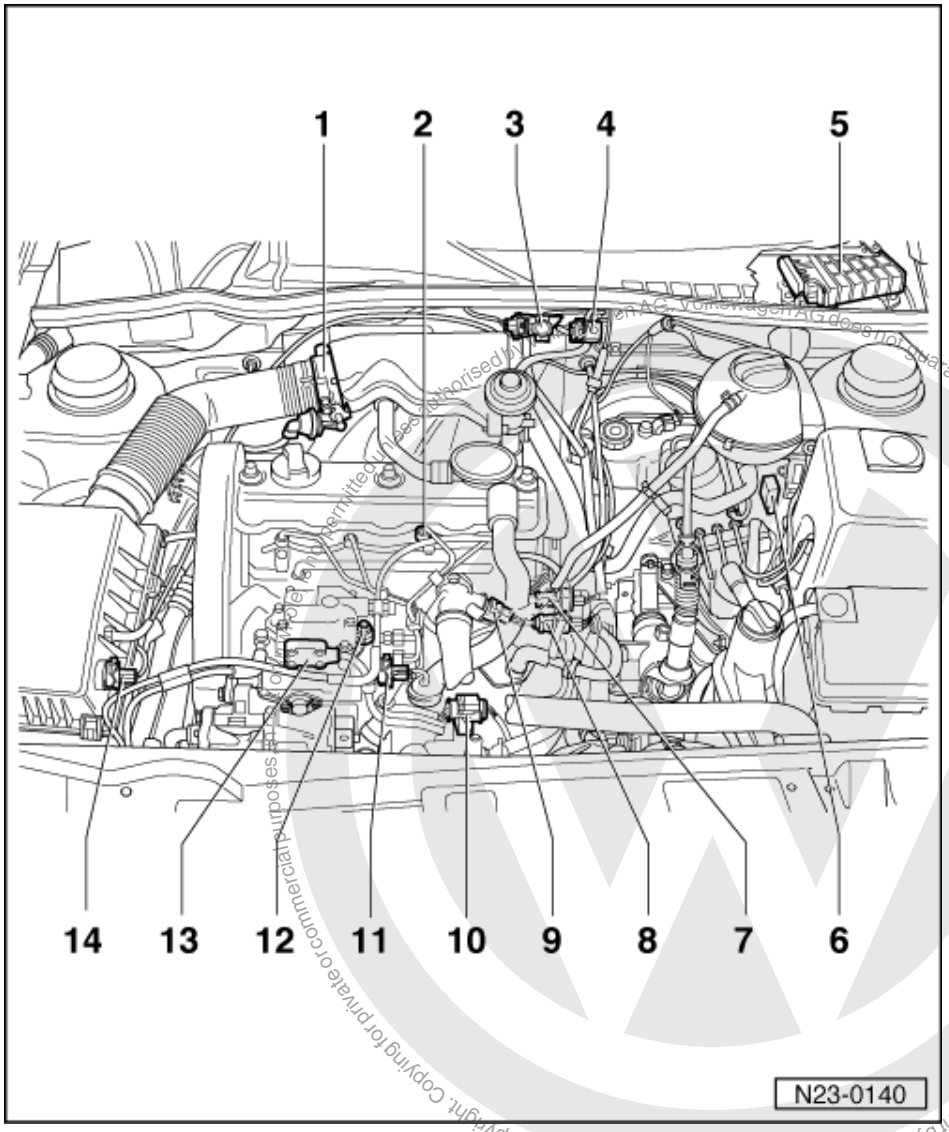

Engine codes AEY, AHB, AKW

1 **Throttle valve housing**
- Removing, installing and checking =>Page 59

2 **Injector with needle lift sender (G80)**

3 **Exhaust gas recirculation valve (N18)**

4 **Throttle valve positioner (V60)**

5 **Diesel direct injection system control unit (J248)**
- Only engine code AEY with altitude sender (F96)

6 **Supplementary heater element relay (J325)**
- With low heater output relay (J359)
- With high heater output relay (J360)

Protected by copyright. Copying for private or commercial purposes, in part or in whole, is not permitted unless authorised by Volkswagen AG. Volkswagen AG does not guarantee or accept any liability with respect to the correctness of information in this document. Copyright by Volkswagen AG.
satelettronica

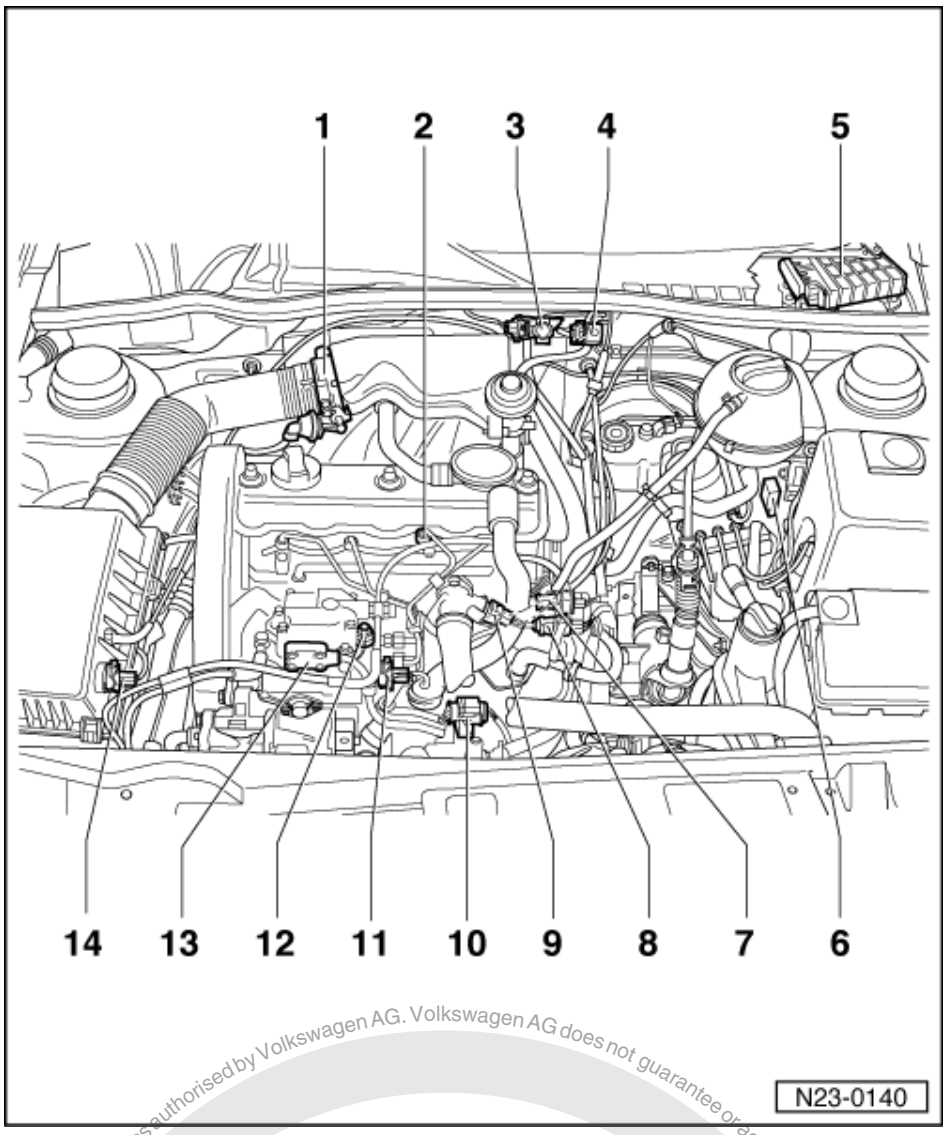

7 Connector
- For needle lift sender (G80)

8 Connector
- For engine speed sender (G28)

9 Coolant temperature sender (G62)

10 Connector
- For fuel temperature sender (G81)
- For quantity adjuster (N146)
- For modulating piston movement sender (G149)
- For fuel cut-off valve (N109) (only with 10 pin connector)
- For commencement of injection valve (N108) (only with 10 pin connector)

Protected by copyright. Copying for private or commercial purposes, in part or in whole, is not permitted unless authorised by Volkswagen AG. Volkswagen AG does not guarantee or accept any liability with respect to the correctness of information in this document. Copyright by Volkswagen AG.

satelettronica

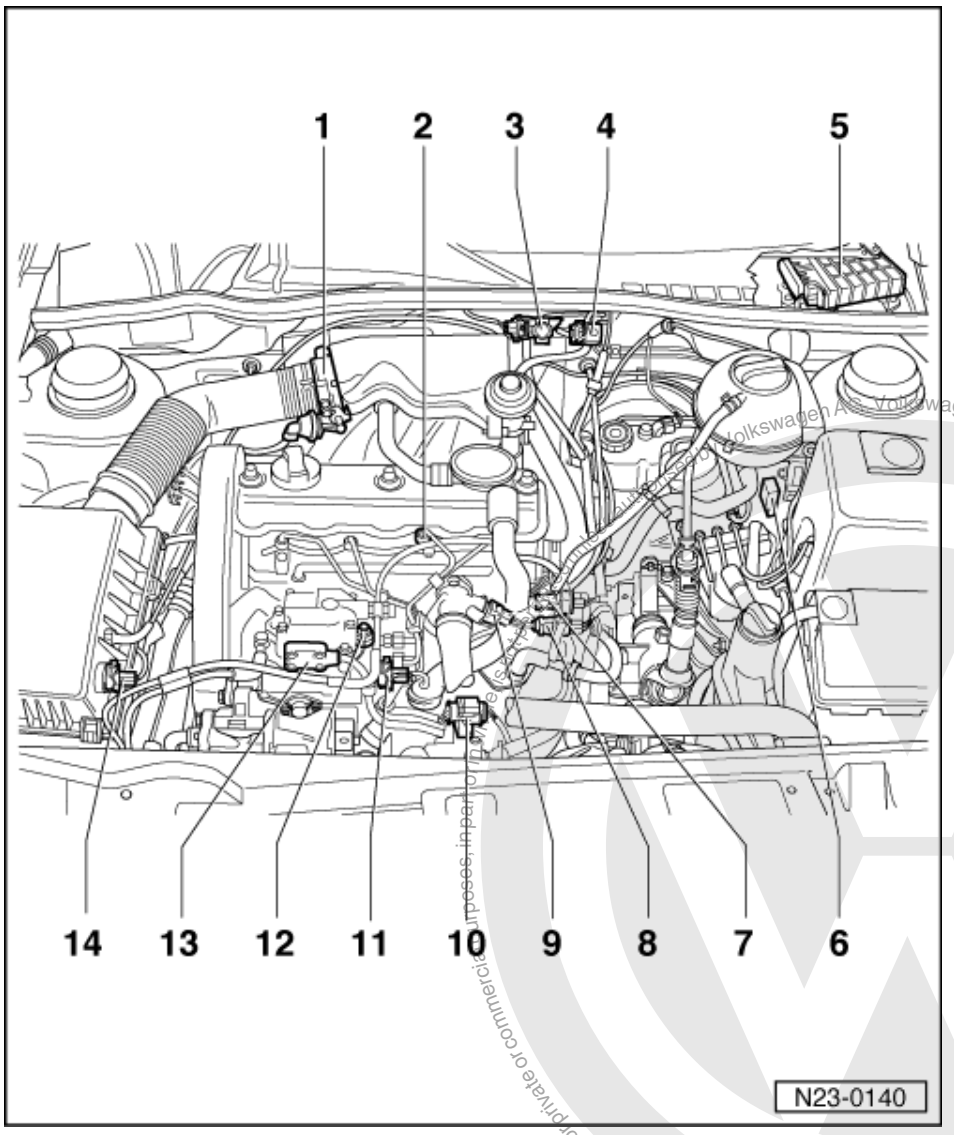

11 Connector
- Only with 7 pin connector for injection pump
- For fuel shut-off valve (N109)
- For commencement of injection valve (N108)

12 Fuel cut-off valve (N109)

13 Injection pump quantity adjuster
- With fuel temperature sender
- With quantity adjuster (N146)
- With modulating piston movement sender (G149)

14 Intake air temperature sender (G42)
- Is displayed as intake manifold temperature sender (G72) for engine codes AHB and AKW, if there is a fault

Protected by copyright. Copying for private or commercial purposes, in part or in whole, is not permitted unless authorised by Volkswagen AG. Volkswagen AG does not guarantee or accept any liability with respect to the correctness of information in this document. Copyright by Volkswagen AG.
satelettronica

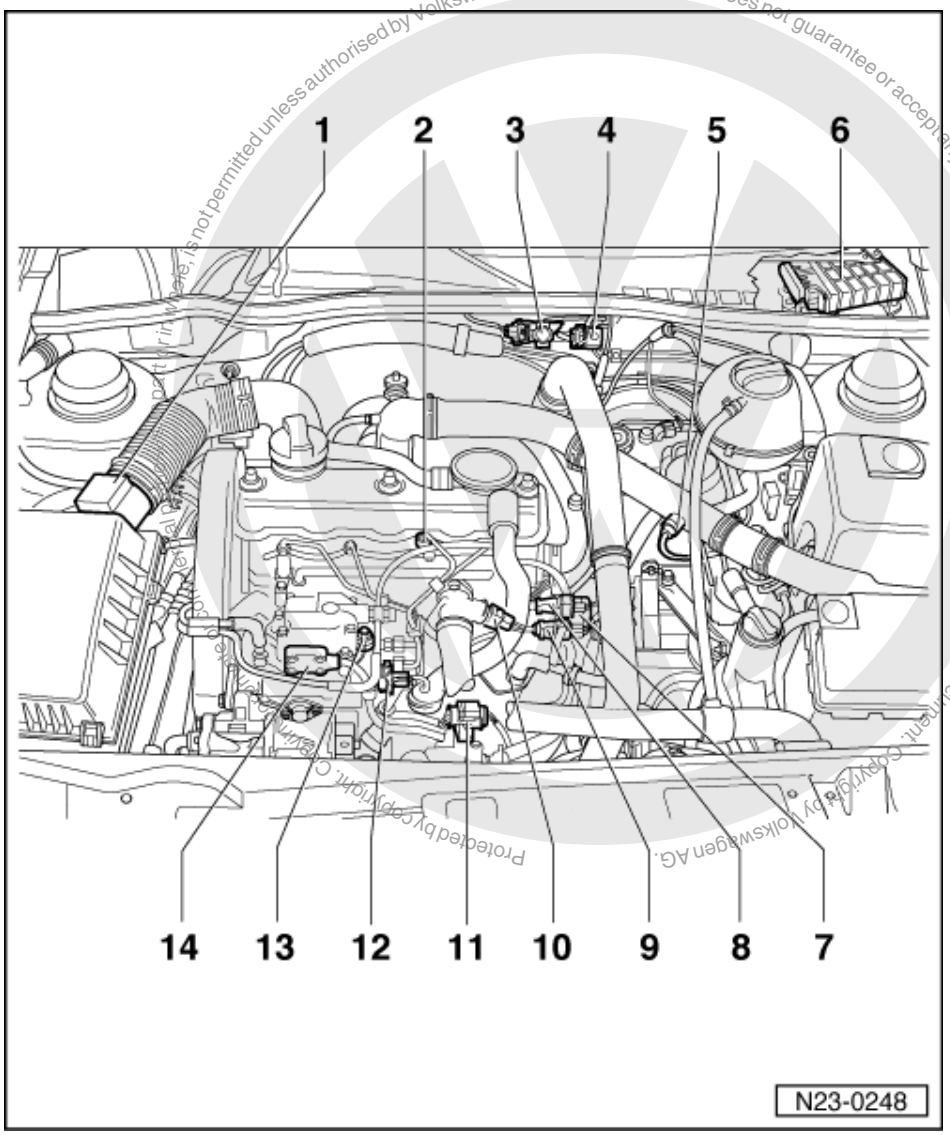

Engine codes AFN, AHU, ALE

1 Air mass meter (G70)
2 Injector with needle lift sender (G80)
3 Exhaust gas recirculation valve (N18)
4 Charge pressure limiting solenoid valve (N75)
5 Intake manifold temperature sender (G72)
6 Diesel direct injection system control unit (J248)
- With sender for intake manifold pressure (G71)
- With altitude sender (F96)
- Renew => Page 117

satelettronica

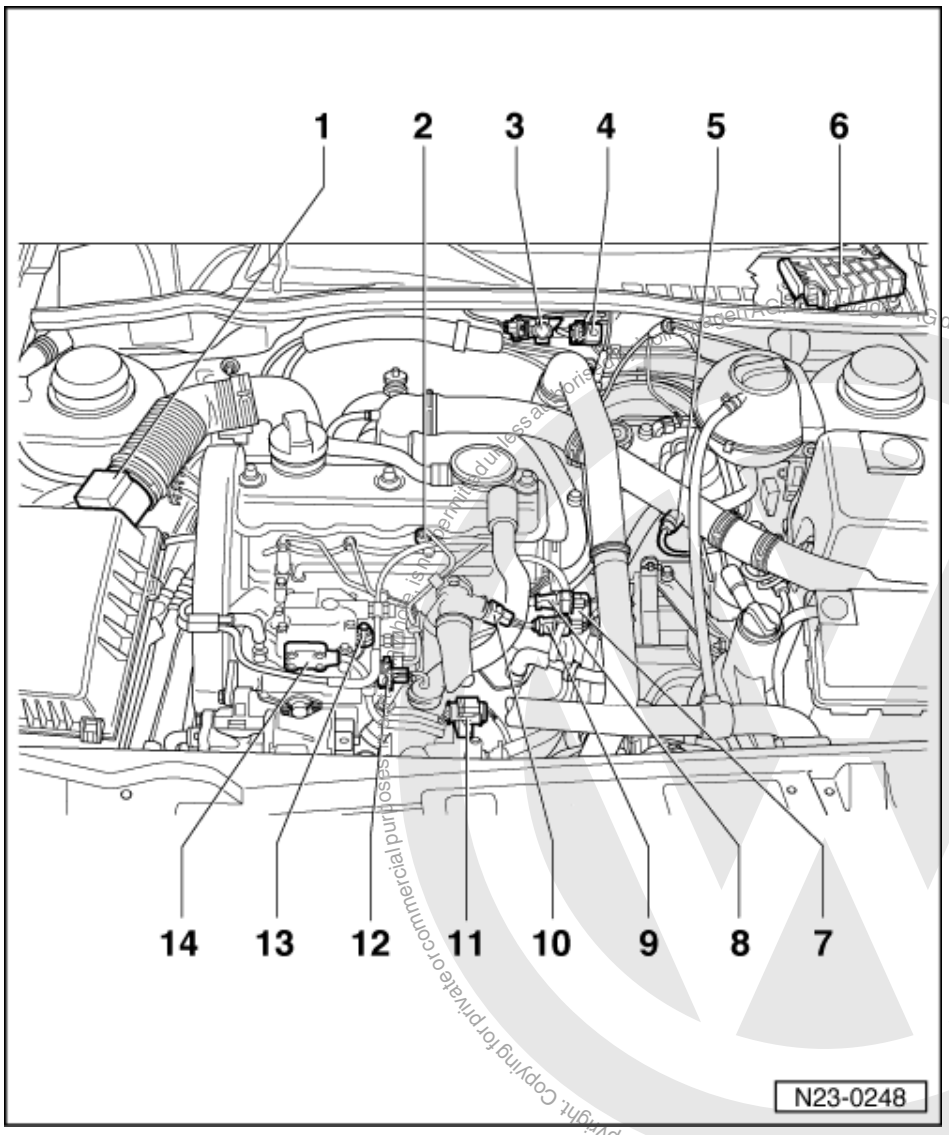

7 Central connector
8 2 pin connector
- For needle lift sender (G80)

9 3 pin connector
- For engine speed sender (G28)

10 Coolant temperature sender (G62)
11 Connector
- For fuel temperature sender (G81)
- For quantity adjuster (N146)
- For modulating piston movement sender (G149)

12 3 pin connector
- For fuel shut-off valve (N109)
- For commencement of injection valve (N108)

Protected by copyright. Copying for private or commercial purposes, in any form, is not permitted unless authorised by Volkswagen AG. Volkswagen AG does not guarantee or accept any liability with respect to the correctness of information in this document. Copyright by Volkswagen AG.
satelettronica

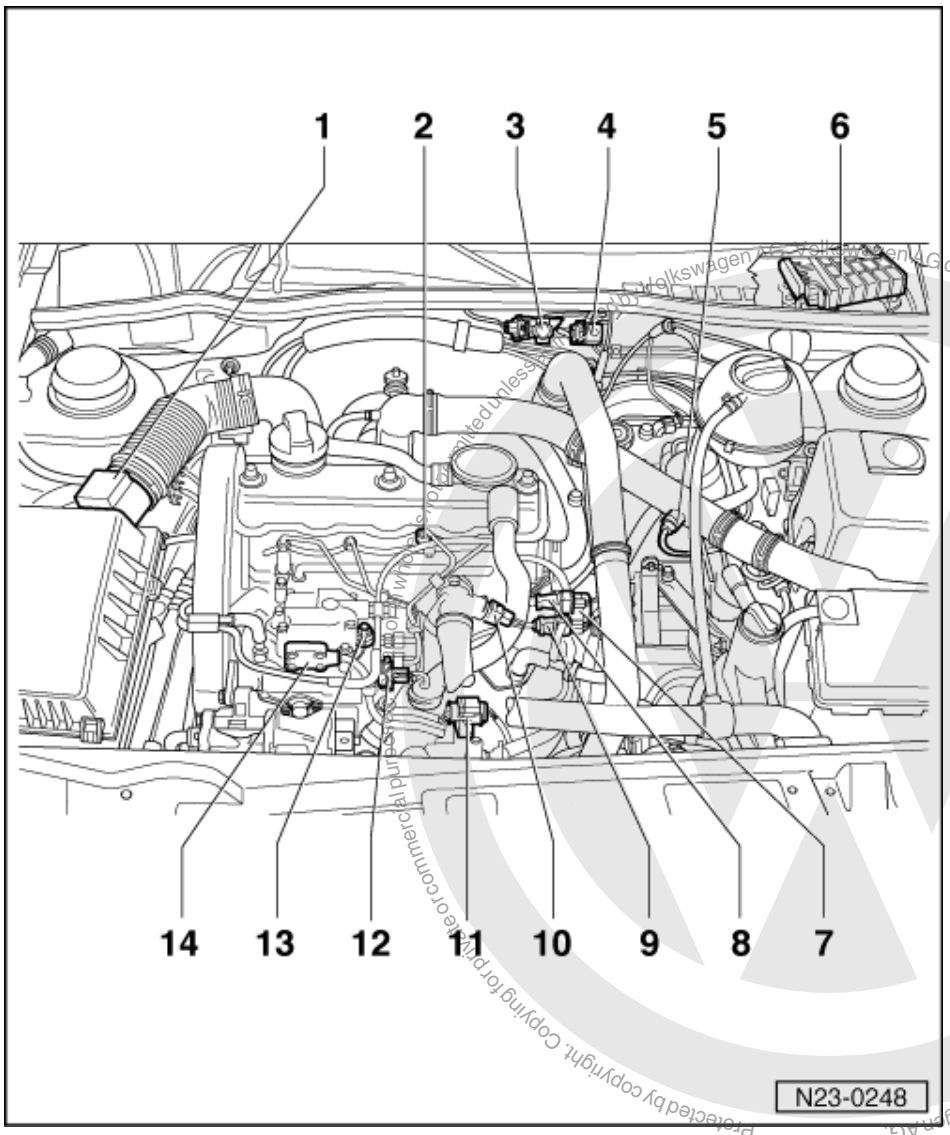

13 Fuel cut-off valve (N109)

14 Injection pump quantity adjuster

- With fuel temperature sender
- With quantity adjuster (N146)
- With modulating piston movement sender (G149)

Protected by copyright. Copying for private or commercial purposes, in part or in whole, is not permitted unless authorised by Volkswagen AG. Volkswagen AG does not guarantee or accept any liability with respect to the correctness of information in this document. Copyright by Volkswagen AG.
satelettronica

1.5 - Servicing injection pump

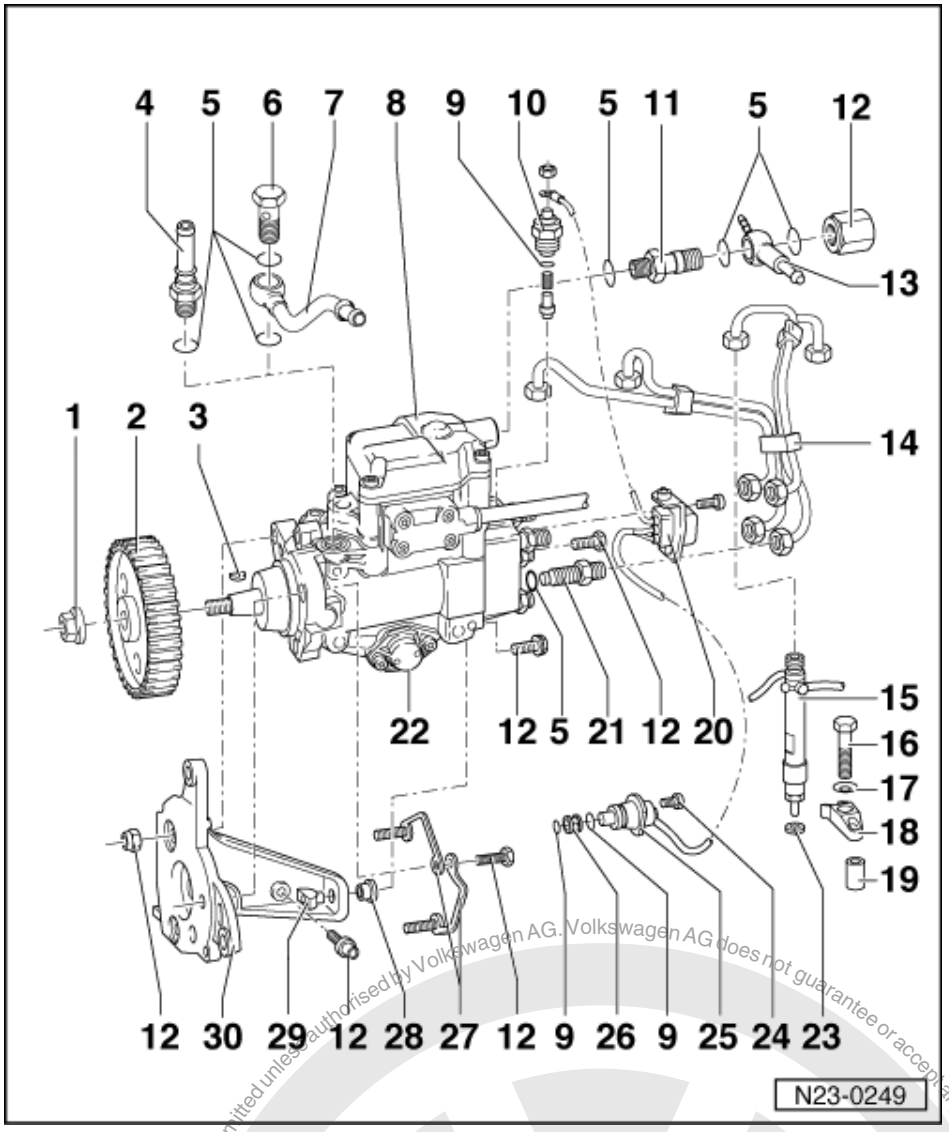

- Observe rules for cleanliness =>Page 45
- Removing and installing injection pump =>Page 61
- Dynamically checking and adjusting injection pump =>Page 66
- Always renew seals and O-rings

1 55 Nm
2 Injection pump sprocket
  - Removing => Removing injection pump Page 61
3 Woodruff key
  - Check seated securely
4 Supply pipe, 25 Nm
  - From fuel filter

satelettronica
Protected by copyright. Copying for private or commercial purposes, in part or in whole, is not permitted unless authorised by Volkswagen AG. Volkswagen AG does not guarantee or accept any liability with respect to the correctness of information in this document. Copyright by Volkswagen AG.

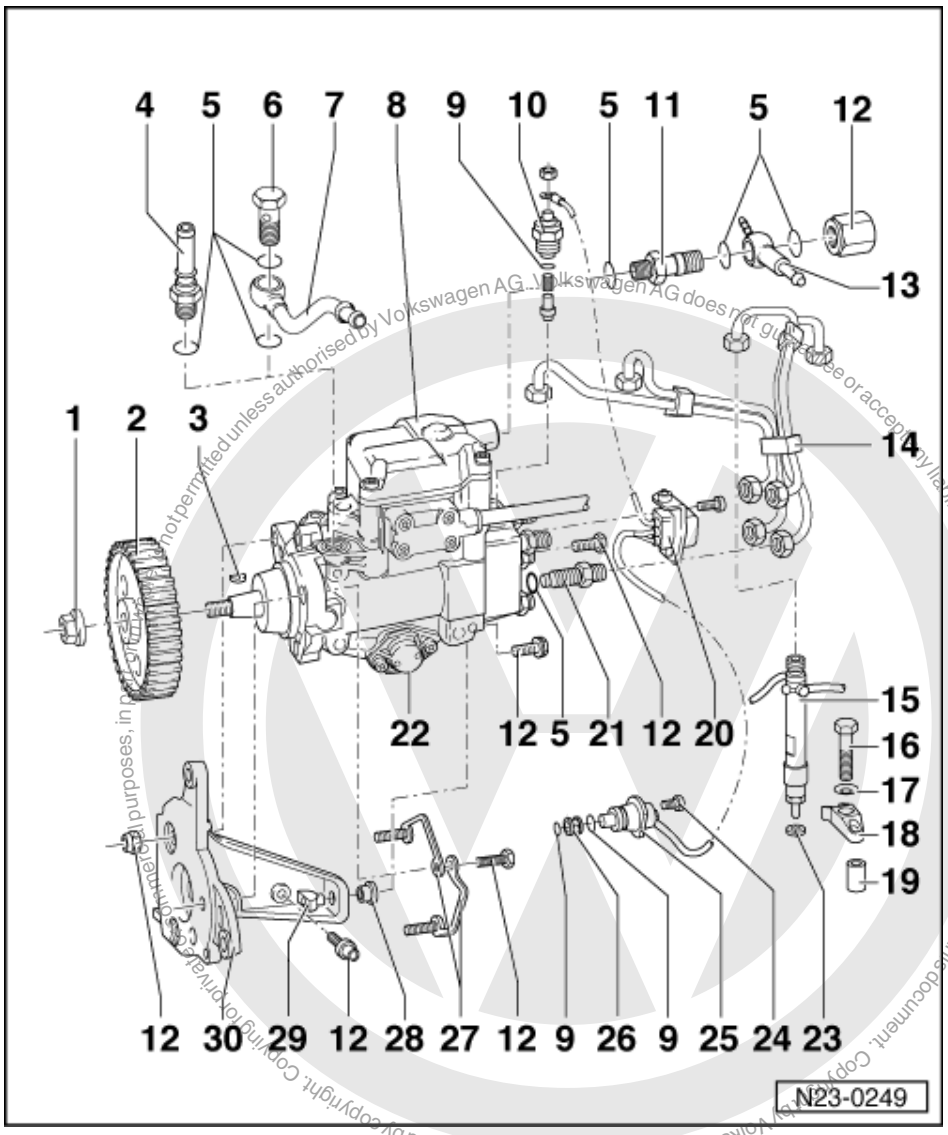

5 Seal
- Renew

6 Banjo bolt, 25 Nm

7 Supply pipe
- From fuel filter

8 Injection pump
- With quantity adjuster (metering)
- With quantity adjuster (N146)
- With modulating piston movement sender (G149)
- With fuel temperature sender

9 O-Ring
- Renew if damaged

10 Fuel shut off valve, 40 Nm

11 Pipe union
- For return pipe
- To control valve/fuel filter

satelettronica

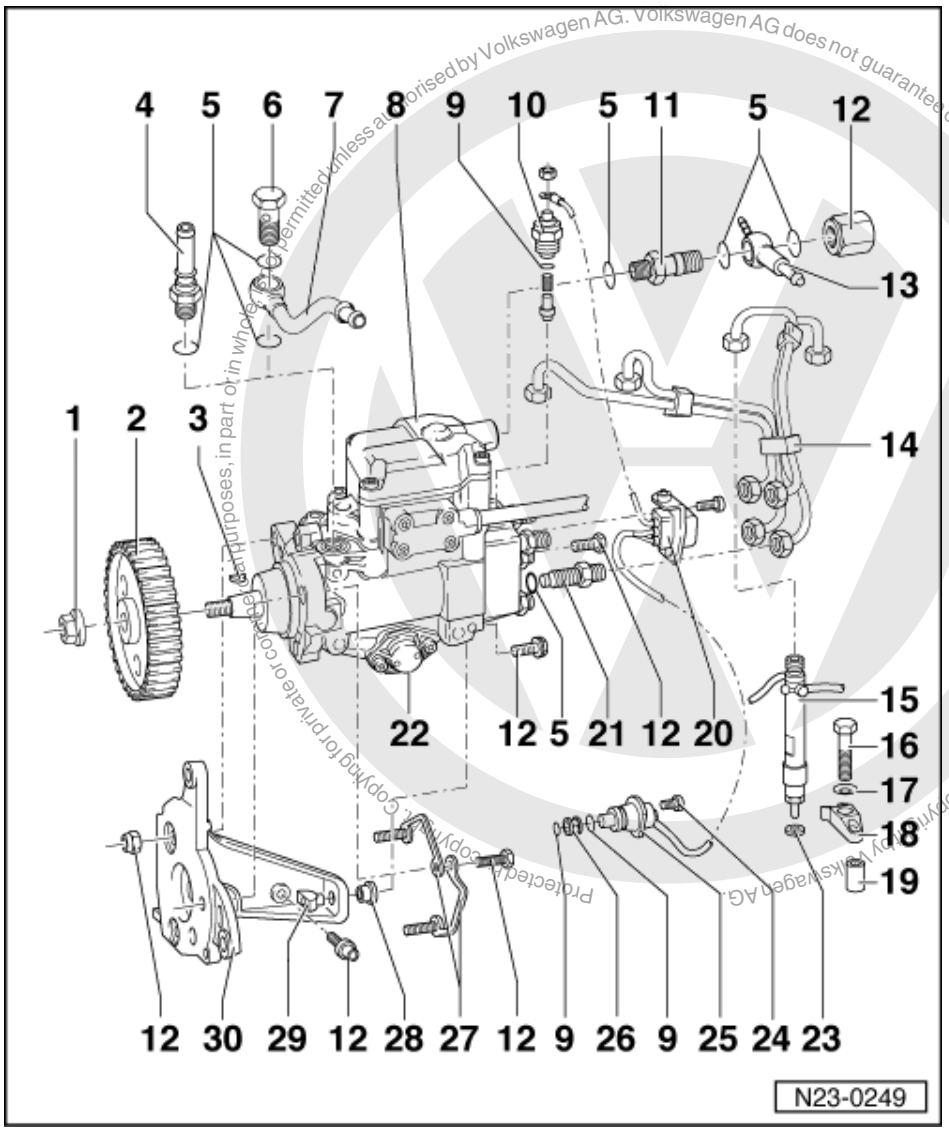

12 25 Nm

13 Return pipe

- To control valve/fuel filter

14 Injector pipes

- Tighten to 25 Nm
- Remove with 3035
- Always remove pipework complete
- Do not alter shape

15 Injector

- For 3rd cylinder with needle lift sender
- Removing and installing
  => Page 71
- Servicing => Page 72

16 20 Nm

17 Dished washer

18 Retainer

19 Mounting

satelettronica

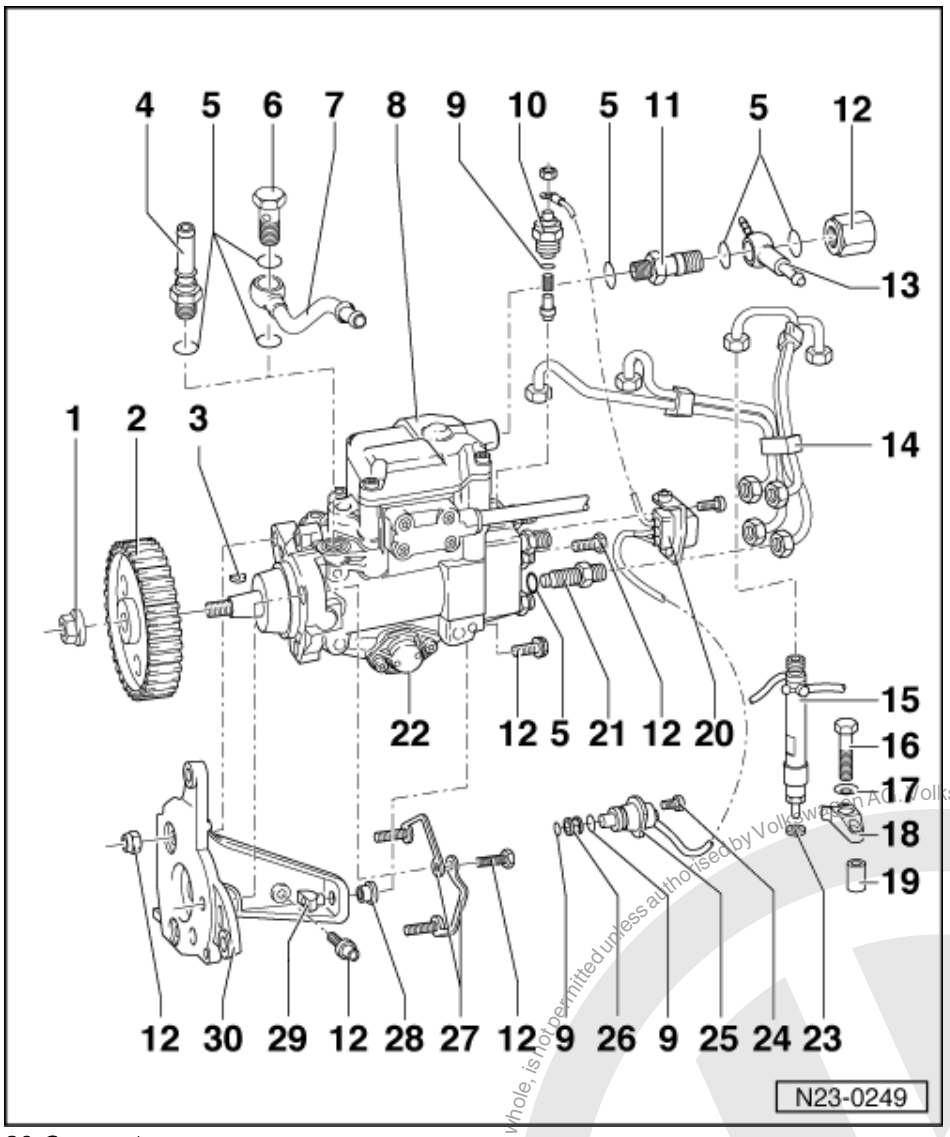

20 Connector
- For fuel cut-off and commencement of injection valves
- (3 pin) with 7 pin injection pump connector

21 Pipe union, 45 Nm
- With pressure valve

22 Timing control cover
- If leaking, replace O-ring =>Page 73

23 Heat insulation seal
- Renew

24 10 Nm

25 Commencement of injection valve (N108)
- Checking =>Page 13 , final control diagnosis

26 Strainer

27 Retainer

Protected by copyright. Copying for private or commercial purposes, in part or in whole, is not permitted unless authorised by Volkswagen AG. Volkswagen AG does not guarantee or accept any liability with respect to the correctness of information in this document. Copyright by Volkswagen AG.
satelettronica

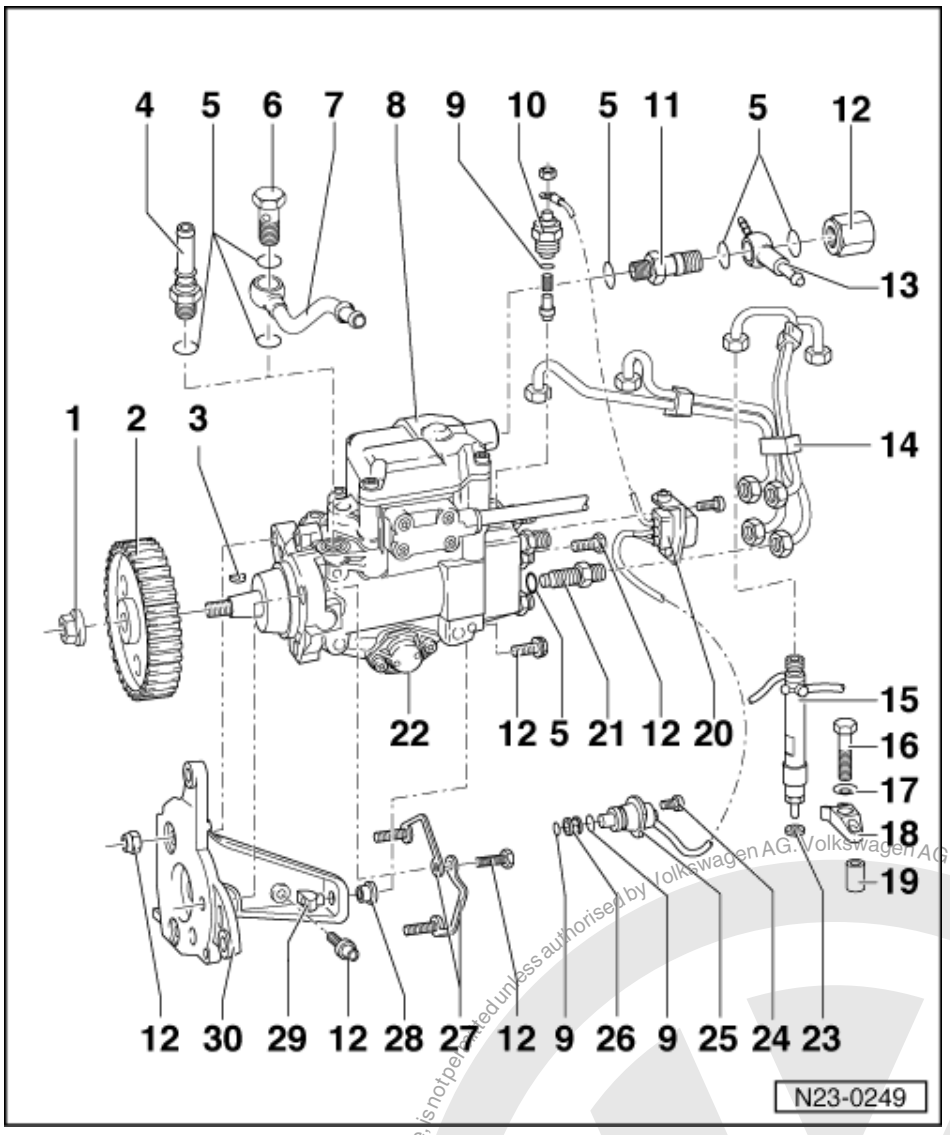

28 Sleeve
- Tapered

29 25 Nm
- Nut with taper

30 Console

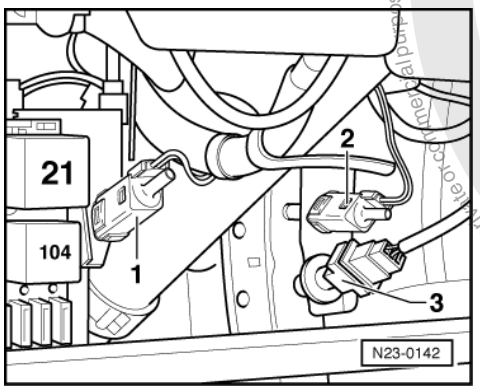

satelettronica
Protected by copyright. Copying for private or commercial purposes, in part or in whole, is not permitted unless authorised by Volkswagen AG. Volkswagen AG does not guarantee or accept any liability with respect to the correctness of information in this document. Copyright by Volkswagen AG.

-> Fig. 1 Switches in footwell

1 - Clutch pedal switch
2 - Brake pedal switch
3 - Brake light switch

1.6 - Setting engine to number 1 cylinder with engine removed

Special tools, workshop equipment, testers, measuring instruments and auxiliary items required

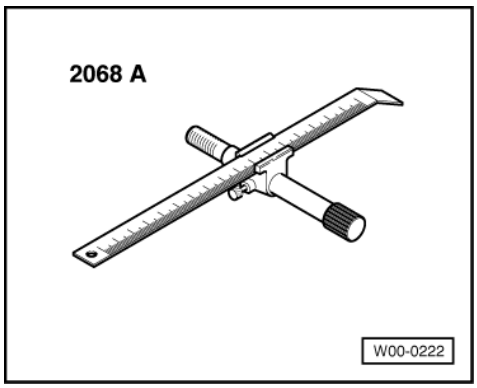

- -> 2068 A Setting device

Work sequence

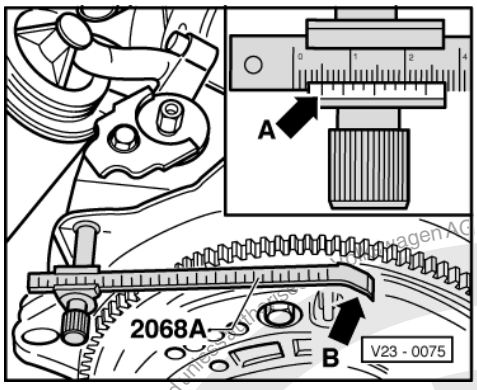

Engine codes AEY, AHB, AKW

- -> Attach adjusting tool as shown.
- Set adjusting tool to 5.0 mm. The reference point is the graduation mark on the left of the vernier scale - arrow A-.
- Turn crankshaft until TDC mark on the flywheel is aligned with the tip of the adjusting tool -arrow B-.

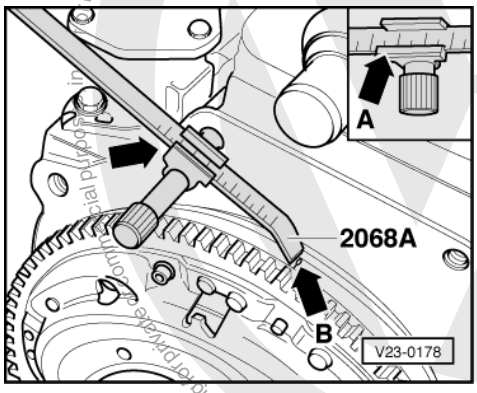

satelettronica
Protected by copyright. Copyright by Volkswagen AG.
Volkswagen AG does not guarantee or accept any liability with respect to the correctness of information in this document.

Engine codes AFN, AHU, ALE
- -> Attach adjusting tool as shown.
- Set adjusting tool to 96.0 mm. The reference point is the graduation mark on the left of the vernier scale - arrow A-.
- Turn crankshaft until TDC mark on the flywheel is aligned with the tip of the adjusting tool -arrow B-.

1.7 - Checking throttle valve positioner housing

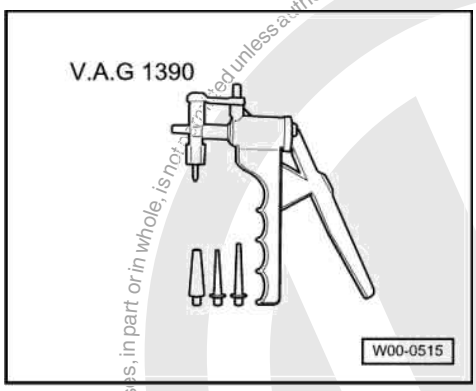

At low engine speeds the vacuum in the intake manifold is not sufficient to ensure correct functioning of the exhaust gas recirculation system. Therefore to increase vacuum the throttle valve remains closed up to 2200 rpm after starting the engine.

Special tools, workshop equipment, testers, measuring instruments and auxiliary items required
- -> Hand vacuum pump V.A.G 1390
- Torque wrench V.A.G 1331 (5...50 Nm)

Removing

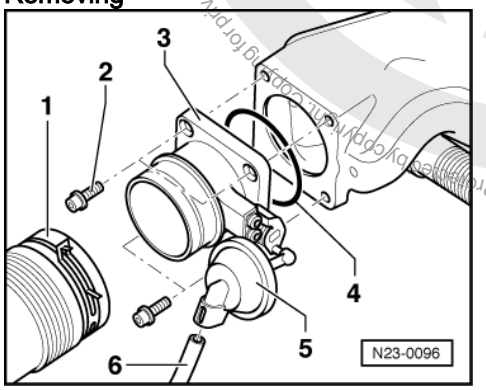

- -> Remove intake hose -1-.
- Pull vacuum hose -6- off vacuum unit -5-.
- Unscrew securing bolts -2- and remove throttle valve housing -3- with O ring -4-.

Installing

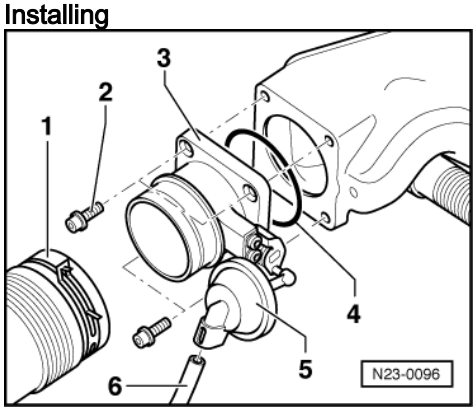

satelettronica

- Attach throttle valve housing with O ring to intake manifold and tighten securing bolts to 10 Nm.

Note:

Renew O ring if damaged.

- -> Attach vacuum hose -6- and install intake hose -1-.

Functional check of vacuum unit

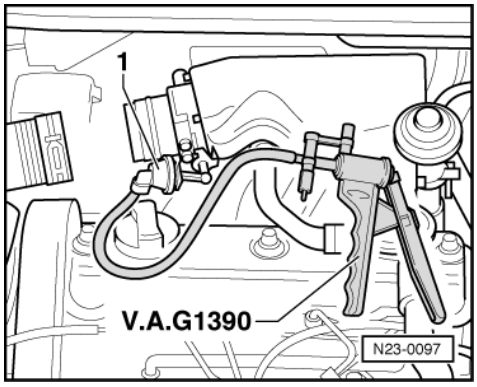

- -> Connect vacuum pump V.A.G 1390 to vacuum unit -1- and create a vacuum.

Specification:
The throttle valve must close up to stop and remain closed.

If the specification is not attained:

- Renew vacuum unit.

satelettronica

Protected by copyright. Copyright by Volkswagen AG. Copying for private or commercial purposes, in part or in whole, is not permitted unless authorised by Volkswagen AG. Volkswagen AG does not guarantee or accept any liability with respect to the correctness of information in this document.

Protected by copyright. Copying for private or commercial purposes, in part or in whole, is not permitted unless authorised by Volkswagen AG. Volkswagen AG does not guarantee or accept any liability with respect to the correctness of information in this document. Copyright by Volkswagen AG.

1.8 - Removing and installing injection pump

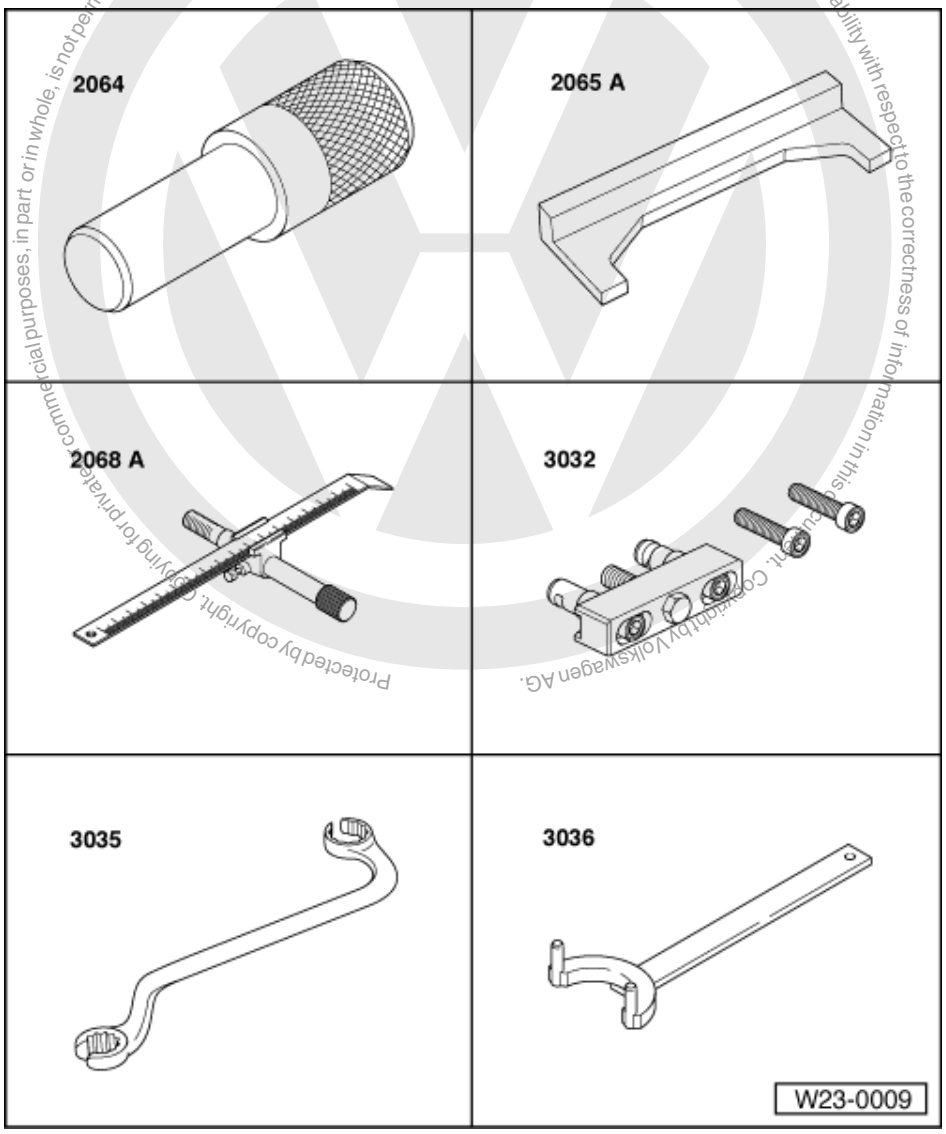

Special tools, workshop equipment, test and measuring appliances and aux. items required

- 2064 Locking pin
- 2065 A Setting bar
- 2068 A TDC setting device
- 3032 Puller
- 3035 Ring spanner
- 3036 Retainer

satelettronica

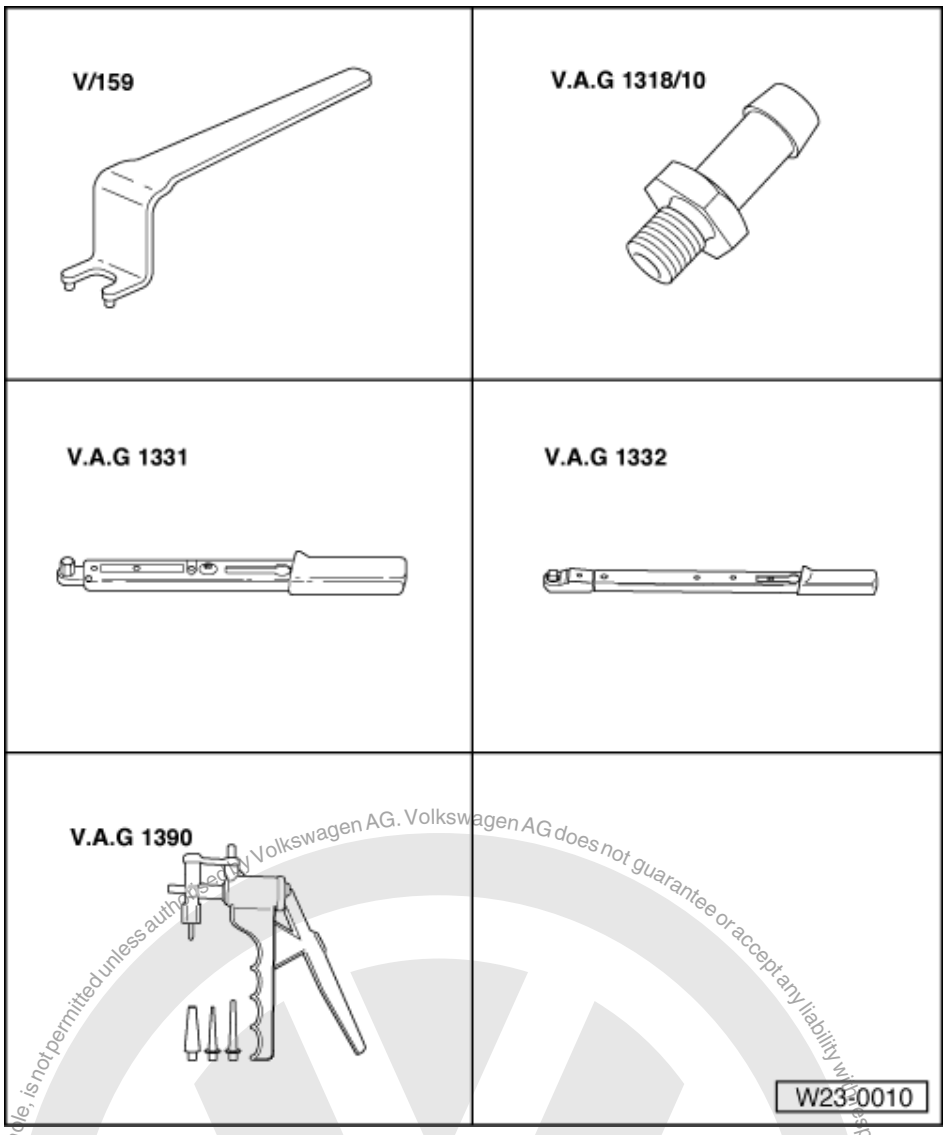

- V159 Pin wrench
- V.A.G 1318/10 Adapter hose
- V.A.G 1331 Torque wrench (5...50 Nm)
- V.A.G 1332 (40...200 Nm) Torque wrench
- V.A.G 1390 Hand vacuum pump

Removing

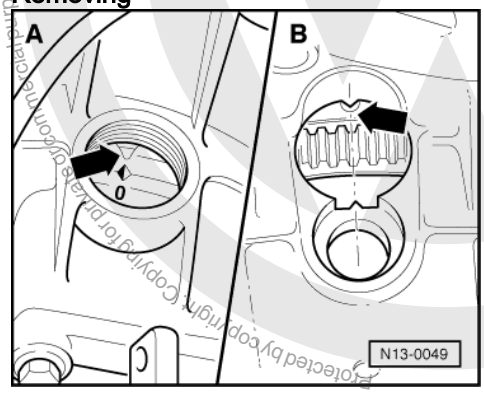

- Remove air cleaner.
- Remove upper toothed belt guard.
- Remove cylinder head cover.

Protected by copyright. Copying for private or commercial purposes, in part or in whole, is not permitted unless authorised by Volkswagen AG. Volkswagen AG does not guarantee or accept any liability with respect to the correctness of information in this document. Copyright by Volkswagen AG.
satelettronica

- -> Turn crankshaft to TDC No. 1 cylinder -arrow-.

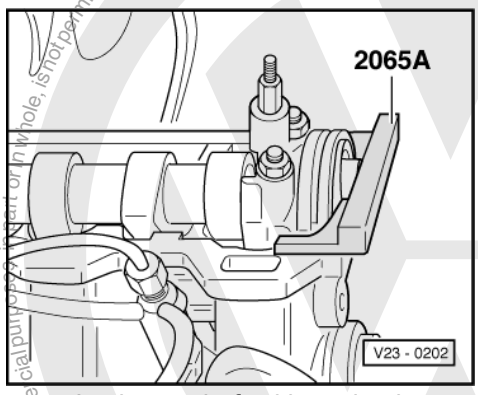

- -> Lock camshaft with setting bar.
- Centralize setting bar as follows:
  Turn arrested camshaft so that one end of setting bar contacts the cylinder head. Using feeler gauge establish the gap at the other end of the setting bar. Place a feeler gauge corresponding to half the gap between setting bar and cylinder head. Turn camshaft until the setting bar contacts the feeler gauge. Place a 2nd feeler gauge, of same thickness, at the other end between setting bar and cylinder head.
- Remove idler roller.
- Remove tensioning roller nut.
- Relieve tooth belt tension and take off camshaft and injection pump sprockets.
- Lock injection pump sprocket with pin 2064.
- Remove injection pump sprocket securing nut.

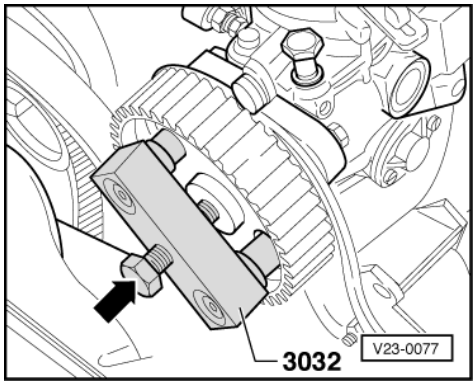

- -> Loosen puller arms and offer up.
- Locate puller arms through holes in injection pump sprocket and tighten.
- Place injection pump sprocket under tension with puller.
- Release injection pump sprocket from injection pump taper by tapping lightly on puller spindle -arrow- (when doing this hold sprocket so that it does not fall off).
- Unbolt all fuel lines at fuel pump.
- Cover openings with a clean cloth.

Note:

Use slotted ring spanner 3035 to remove high pressure fuel pipes.

satelettronica

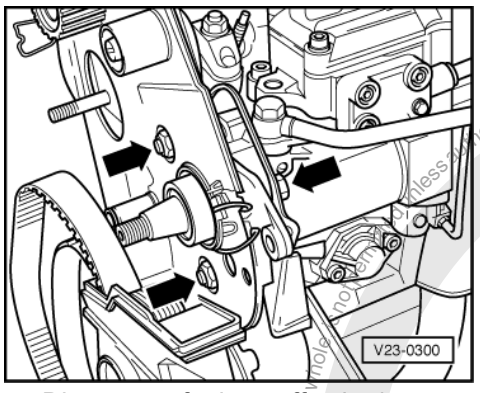

- Disconnect fuel cut-off valve/commencement of injection valve connector.
- Disconnect quantity adjuster connector and unclip connector from retainer.
- -> Remove securing bolts from console -arrows-.

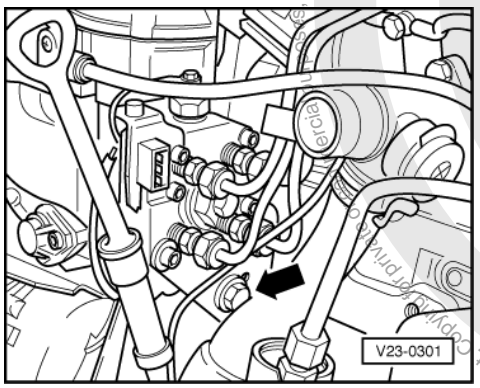

- -> Then remove bolt from rear support -arrow-.
- Take off injection pump.

Installing

- Insert injection pump into console and then tighten securing bolt on rear support with conical nut first.
- Align injection pump to central position in console elongated holes and secure hand tight.

Note:

The commencement of injection is set dynamically with V.A.G 1551.

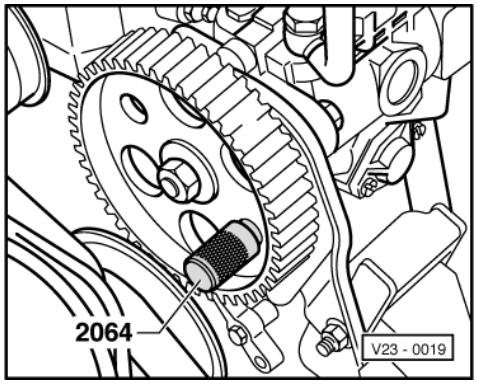

- -> Install injection pump sprocket and lock in position with pin 2064. When installing observe spring washer seating.
- Tighten securing nut to 55 Nm.

Protected by copyright. Copying for private or commercial purposes, in part or in whole, is not permitted unless authorised by Volkswagen AG. Volkswagen AG does not guarantee or accept any liability with respect to the correctness of information in this document. Copyright by Volkswagen AG.
satelettronica

Note:

Never use setting bar as a counter hold when loosening and tightening the camshaft sprocket, use retainer 3036.

- Loosen camshaft sprocket securing bolt a half turn.
- Place a drift through hole in the rear of the toothed belt guard and release the camshaft sprocket from camshaft taper with a blow from a hammer.
- Take camshaft sprocket off.
- Check whether TDC mark on flywheel and reference mark are aligned.
- Place tooth belt on injection pump sprocket and tensioning roller.
- Fit camshaft sprocket into toothed belt and secure sprocket so that the camshaft can still turn.
- Install idler roller.
- Remove locking pin from injection pump sprocket.

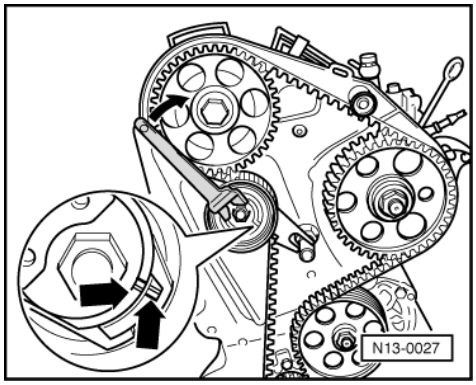

- -> Tension toothed belt. Using pin wrench (e.g. Matra V159) on eccentric turn clockwise until the notch and the raised mark -arrows- align.

Note:

If the eccentric has been turned too far the tensioning roller must be relieved completely and retensioned. The eccentric must never be turned back when it has been turned too far.

- Tighten securing nut to 20 Nm.
- Check TDC mark on flywheel again.
- Tighten camshaft sprocket securing bolt to 45 Nm.
- Remove setting bar 2065A from camshaft.
- Turn crankshaft two rotations in engine D.O.R. until crankshaft is set to TDC No. 1 cylinder again.
- Check if
  - the TDC mark on flywheel
  - the setting bar on camshaft
  - the pin 2064 in injection pump sprocket
  - the tensioning roller setting (notch/raised mark)

  align/are fitted correctly.
- If notch and raised mark do not align, tension the tensioning roller. To do this, hold tensioning roller with pin wrench Matra V159, loosen securing nut, turn eccentric clockwise further until notch and raised mark align opposite one another and tighten securing nut to 20 Nm.

Protected by copyright. Copying for private or commercial purposes, in part or in whole, is not permitted unless authorised by Volkswagen AG. Volkswagen AG does not guarantee or accept any liability with respect to the correctness of information in this document. Copyright by Volkswagen AG.
satelettronica

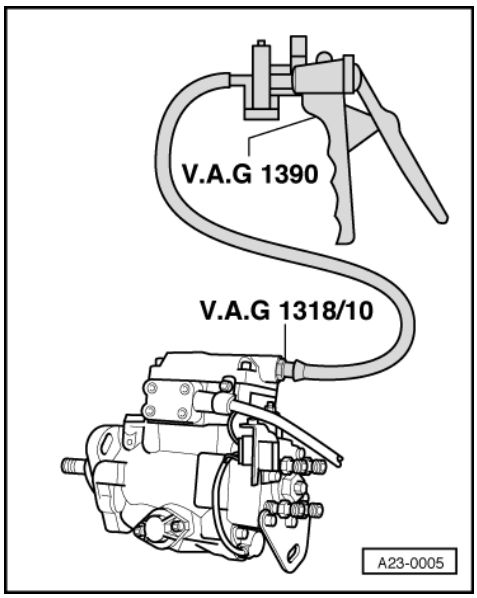

- Turn crankshaft two rotations in engine D.O.R. until crankshaft is set to TDC No. 1 cylinder again.
- Repeat check.
- Reconnect injection pipes, fuel pipes and electrical wiring.

-> Fill injection pump with Diesel as follows.

- Screw adapter 1318/10 into injection pump return supply opening.
- Connect hand vacuum pump 1390 with approx. 1 m transparent plastic hose to adapter.
- Operate vacuum pump until fuel flows out of return supply opening. Do not draw fuel into vacuum pump.
- Remove adapter and connect return supply pipe.
- Install toothed belt guard, cylinder head cover and air cleaner.
- Dynamically check commencement of injection and adjust if necessary =>Page 66.

1.9 - Dynamically checking and adjusting commencement of injection

Notes:

- Dynamically checking and correcting commencement of injection is only possible in function 04 "Engine basic setting".
- The commencement of injection must always be checked after renewing the toothed belt or loosening the injection pump bolts or toothed belt sprockets and if necessary adjusted.

Special tools, workshop equipment, testers, measuring instruments and auxiliary items required

- Fault reader V.A.G 1551 or vehicle system tester V.A.G 1552 with cable V.A.G 1551/3

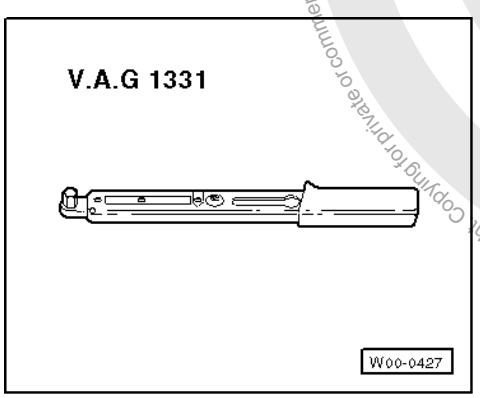

satelettronica
Protected by copyright. Copying for private or commercial purposes, part or on whole, is not permitted unless authorised by Volkswagen AG. Volkswagen AG does not guarantee or accept any liability with respect to the correctness of information in this document. Copyright by Volkswagen AG.

- -> V.A.G 1331 Torque wrench (5...50 Nm)

Checking and adjustment conditions
- Mechanical engine basic setting OK.
- Toothed belt tension OK.

Work sequence
- Connect fault reader V.A.G 1551 (V.A.G 1552) and select engine electronics control unit with the "Address word" 01. When doing this the engine must be running at idling speed.
  (Connecting fault reader and selecting engine electronics control unit => Page 2 .)

-> Indicated on display:

```
Rapid data transfer      HELP
Select function XX
```

- Press keys 0 and 4 for the function "Introduction of basic setting" and confirm entry with Q key.

-> Indicated on display:

```
Basic setting      HELP
Input display group number XXX
```

- Press key 0 three times for "Display group number 0" and confirm entry with Q key.

-> Indicated on display:
(1...10 = Display zones)

```
System in basic setting 0
     1     2     3     4     5     6
7     8     9     10
```

The commencement of injection in display zone 2 is dependent on the fuel temperature in display zone 9.

Engine code AEY

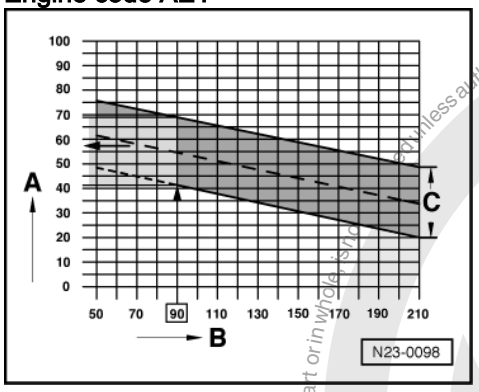

-> A - Display zone 2 commencement of injection
B - Display zone 9 fuel temperature
C - Specified range for commencement of injection

Example:
The numerical value 90 in display zone 9 (B) corresponds to a numerical value range of 42...69 in display zone 2 (A).

Engine codes AHB, AKW

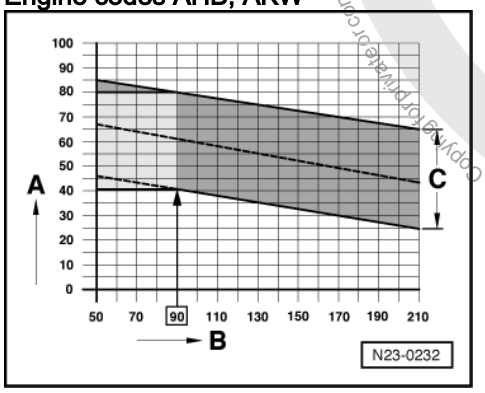

Protected by copyright. Copyright by Volkswagen AG. Copyright by Volkswagen AG. Volkswagen AG does not guarantee or accept any liability with respect to the correctness of information in this document. Copyright by Volkswagen AG. Reproduction in whole or in part or in whole is prohibited unless authorised by Volkswagen AG. Volkswagen AG does not guarantee or accept any liability with respect to the correctness of information in this document. Copyright by Volkswagen AG. Protected by copyright. Copyright by Volkswagen AG. Reproduction in whole or in part or in whole is prohibited unless authorised by Volkswagen AG. Volkswagen AG does not guarantee or accept any liability with respect to the correctness of information in this document. Copyright by Volkswagen AG.
satelettronica

-> A - Display zone 2 commencement of injection
B - Display zone 9 fuel temperature
C - Specified range for commencement of injection

Example:

The numerical value 90 in display zone 9 (B) corresponds to a numerical value range of 41...80 in display zone 2 (A).

Engine codes AFN, AHU, ALE

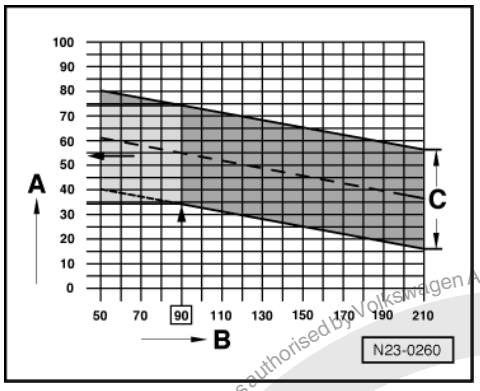

-> A - Display zone 2 commencement of injection
B - Display zone 9 fuel temperature
C - Specified range for commencement of injection

Example:

The numerical value 90 in display zone 9 (B) corresponds to a numerical value range of 34...74 in display zone 2 (A).

Continued for all engine codes

Notes:

- If the commencement of injection is advanced turn injection pump in engine direction of rotation, if the commencement of injection is retarded turn against direction of rotation.
- If when checking the commencement of injection the specifications are within zone -C- then no adjustment is required. After repairs e.g. removing and installing injection pump, adjusting timing then the commencement of injection is to be set to the mean valve (dashed line) of specification zone -C-.

- Loosen injection pump securing bolts approx. one turn, leaving the easiest bolt to reach till last.
- Hold injection pump by hand under tension in direction to be adjusted.
- Carefully loosen last securing bolt until the pump can be turned slightly and then retighten securing bolt.
- Observe figures in zone 2 and if necessary adjust again until the mean value for specification zone -C- is displayed.
- Tighten injection pump securing bolts to 25 Nm.
- Check commencement of injection again.
- Press the ⇒key.
- Press keys 0 and 6 for the "End data transfer" function and confirm input with the Q key.

Note:

Loosen and re-tighten (25 Nm) the injection pipes on the injection pump after dynamically adjusting the injection pump. This relieves the strain on pipes and prevents vibration breakages.

Copyright by Volkswagen AG. Volkswagen AG does not guarantee or accept any liability with respect to the correctness of information in this document. Copyright by Volkswagen AG. Distributed by copyright owner authorised by Volkswagen AG. Copying for private or commercial purposes, in part or in whole, is not permitted unless authorised by Volkswagen AG.
satelettronica

Protected by copyright. Copyright by Volkswagen AG. Volkswagen AG does not guarantee or accept any liability with respect to the correctness of information in this document. Copyright by Volkswagen AG. Reproduction for private or commercial purposes, in part or in whole, is not permitted unless authorised by Volkswagen AG.

1.10 - Checking valve timing

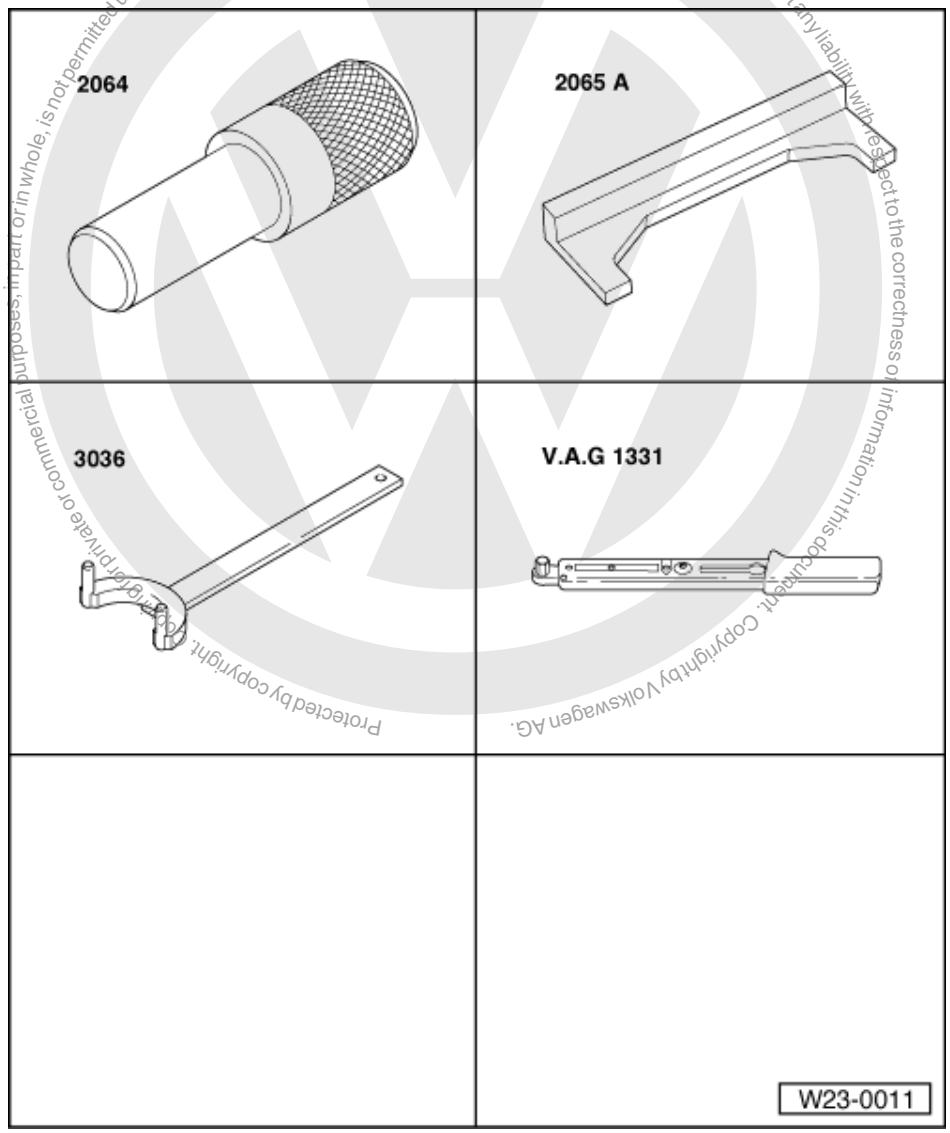

Special tools, workshop equipment, test and measuring appliances and aux. items required

- 2064 Locking pin
- 2065 A Setting bar
- 3036 Retainer
- V.A.G 1331 Torque wrench (5...50 Nm)

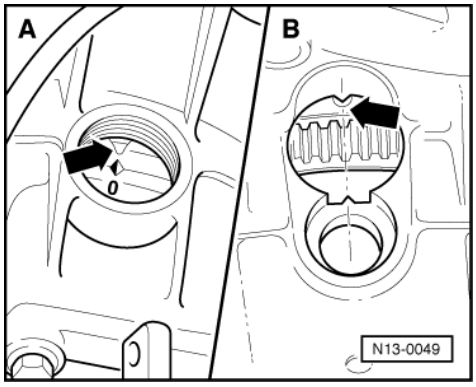

satelettronica

Work sequence

- Remove upper toothed belt guard and cylinder head cover.
- Check tension of toothed belt.
- -> Turn crankshaft to TDC No. 1 cylinder -arrow-.

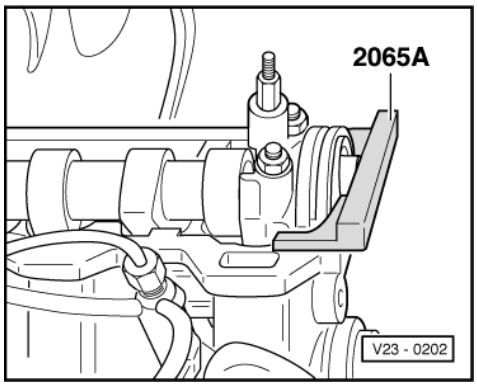

- -> Setting bar must fit into the slot in the camshaft. If it is not possible to insert the bar, adjust valve timing as follows.
- Rotate camshaft so that setting bar can be inserted.
- Centralize setting bar as follows:
  Turn arrested camshaft so that one end of setting bar contacts the cylinder head. Using feeler gauge establish the gap at the other end of the setting bar. Place a feeler gauge corresponding to half the gap between setting bar and cylinder head. Turn camshaft until the setting bar contacts the feeler gauge. Place a 2nd feeler gauge, of same thickness, at the other end between setting bar and cylinder head.

Note:

Never use setting bar as a counter hold when loosening and tightening the camshaft sprocket, use retainer 3036.

- Loosen camshaft sprocket securing bolt a half turn.
- Place a drift through hole in the rear of the toothed belt guard and release the camshaft sprocket from camshaft taper with a blow from a hammer.

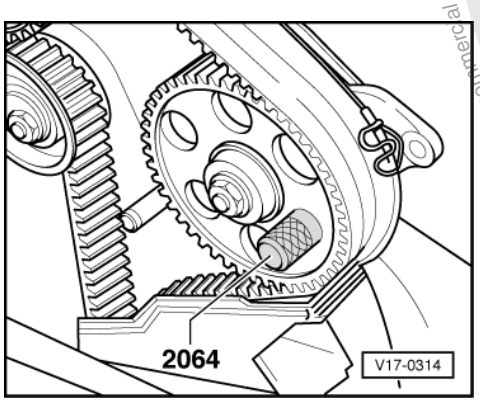

- -> Lock injection pump sprocket with pin 2064.
- Check crankshaft TDC setting. The TDC marking on the flywheel and the casting on the clutch bell housing must align.
- Remove locking pin.
- Tighten camshaft sprocket securing bolt to
  45 Nm.
- Remove setting bar.
- Install toothed belt guard and cylinder head cover.
- Dynamically check commencement of injection=>Page 66 .

Protected by copyright. Copying for private or commercial purposes, in part or in whole, is not permitted unless authorised by Volkswagen AG. Volkswagen AG does not guarantee or accept any liability with respect to the correctness of information in this document. Copyright by Volkswagen AG.
satelettronica

Protected by copyright. Copying for private or commercial purposes, in part or in whole, is not permitted unless authorised by Volkswagen AG. Volkswagen AG does not guarantee or accept any liability with respect to the correctness of information in this document. Copyright by Volkswagen AG.

1.11 - Removing and installing injectors

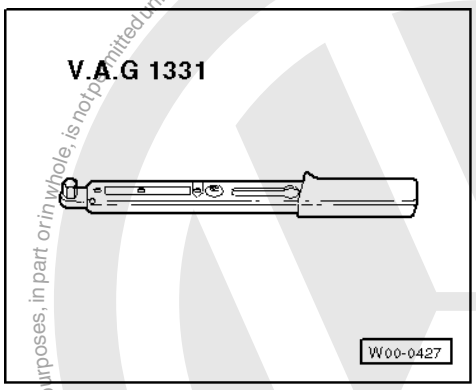

Special tools, workshop equipment, testers, measuring instruments and auxiliary items required

- -> V.A.G 1331 Torque wrench (5...50 Nm)

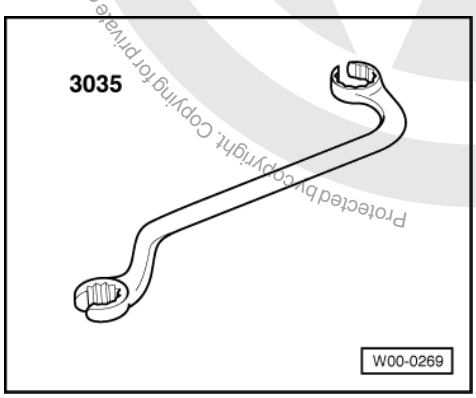

- -> 3035 Ring spanner

Note:

Defective injectors cause the following faults:

- Misfiring
- Knocking in one or more cylinders
- Engine over-heating
- Loss of power
- Excessive black exhaust smoke
- Higher fuel consumption
- Excessive blue smoke when starting from cold

Defective injectors can be located by loosening the high pressure pipe union on each injector in turn with the engine running at a fast idling speed. If engine speed remains constant after loosening a pipe union, this indicates a defective injector.

Removing

- Remove injection pipes with an slotted ring spanner 3035.

Note:

Always remove pipe set complete. Do not alter pipe shape.

- Remove securing nut, take off retainer and take out injector.

satelettronica

Installing

Note:

Always renew heat insulating seal between cylinder head and injectors.

- Insert injector.
- Check mounting is seated correctly in cylinder head.
- Fit retainer.

Tightening torques:
Injection pipes = 25 Nm
Retainer nut = 20 Nm

1.12 - Servicing injectors

This engine is equipped with dual spring injectors. The fuel injected therefore occurs in 2 stages.
If faults occur with these injectors then they are to be exchanged as neither servicing nor pressure setting is possible.

Special tools, workshop equipment, testers, measuring instruments and auxiliary items required

- Injector test unit V.A.G 1322 with pressure pipe V.A.G 1322/2

Test conditions

- Pressure gauge on

Checking injection pressure

Warning!
When testing injectors ensure that the jet of fuel does not contact the hands as the high pressure will cause the fuel to penetrate the skin and may cause severe injuries.

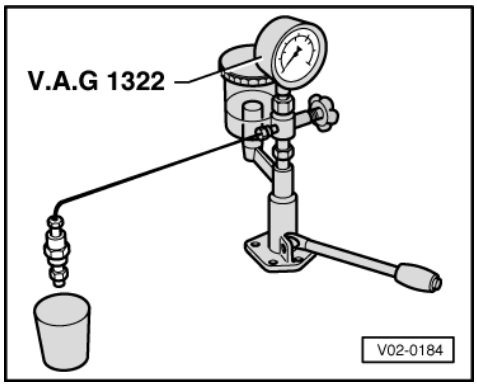

- -> Connect injector to injector test unit.
- Press pump lever down slowly. When spray begins, read off opening pressure. For deviations from specification renew injector.

Engine codes AEY, AFN, AHB, AHU, AKW

Specification:
New injectors: 190 ... 200 bar
Wear limit: 170 bar

Engine code ALE

Specification:

satelettronica

New injectors: 220 ... 230 bar
Wear limit: 200 bar

Checking for leaks

- Move pump lever down slowly and maintain a pressure of approx. 150 bar for 10 seconds. No fuel should leak from the nozzle tip.
- If injector leaks, replace.

1.13 - Renewing injection timing device cover O-ring

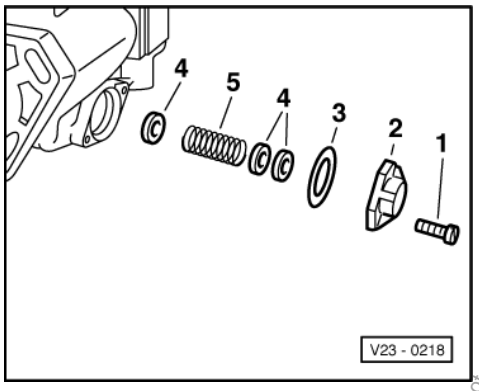

- Place a clean cloth under the injection pump.
- -> Remove cover screws -1- with commercially available key for Torx socket head screws, e.g. Hazet 2115-T30.
- Remove cover -2- and clean it.
- Renew O-ring -3- and install cover with existing shims -4-.

2 - Checking components and functions

2.1 - Checking components and functions

2.2 - Checking Diesel direct injection system voltage supply

Special tools, workshop equipment, testers, measuring instruments and auxiliary items required

- Test box V.A.G 1598/18 or V.A.G 1598/22
- Hand multimeter V.A.G 1526 or multimeter V.A.G 1715
- Adapter set V.A.G 1594
- Current flow diagram

Test prerequisites:

- Battery voltage OK.

Protected by copyright. Copying for private or commercial purposes, in part or in whole, is not permitted unless authorised by Volkswagen AG. Volkswagen AG does not guarantee or accept any liability with respect to the correctness of information in this document. Copyright by Volkswagen AG.
satelettronica

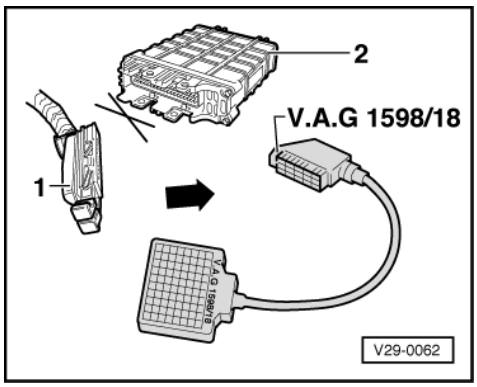

Test sequence

- Switch off ignition.

Vehicles with 68-pin control unit

- -> Connect test box V.A.G 1598/18 to control unit wiring loom.
- Bridge sockets 42+46 with auxiliary cables from V.A.G 1594.

- Measure voltage between following sockets:
  45+1, 68+1, 23+1 and 23+24
  Specification: approx. battery voltage

Vehicles with 80-pin control unit

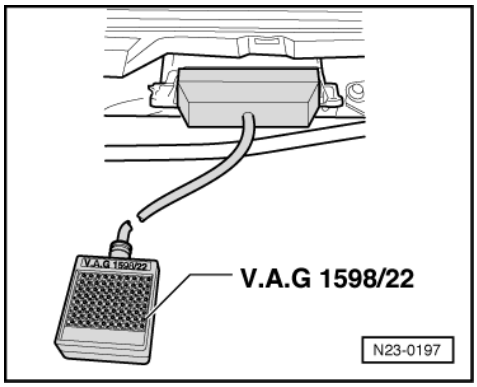

- -> Connect test box V.A.G 1598/22 to control unit wiring loom.
- Bridge sockets 33+1 with auxiliary cables from V.A.G 1594.
- Measure voltage between following sockets:
  2+1, 28+1, 27+2 and 28+27
  Specification: approx. battery voltage

Continued for all vehicles

If the specification is not obtained:

- Check voltage supply relay terminal 30 (J317).
- Check wiring connections for open circuit, short circuit and transfer resistance at contacts according to current flow diagram.

If no fault is found in wiring and relay:

- Renew Diesel direct injection system control unit (J248) => Page 117 .

Protected by copyright. Copying for private or commercial purposes, in part or in whole, is not permitted unless authorised by Volkswagen AG. Volkswagen AG does not guarantee or accept any liability with respect to the correctness of information in this document. Copyright by Volkswagen AG.
satelettronica

2.3 - Checking engine speed sender

The engine speed sender is speed and reference mark sender. During failure the engine continues running in an emergency programme. Replacement sender is needle lift sender -G80.

Special tools, workshop equipment, testers, measuring instruments and auxiliary items required

- Test box V.A.G 1598/18 or V.A.G 1598/22
- Hand multimeter V.A.G 1526 or multimeter V.A.G 1715
- Adapter set V.A.G 1594
- Current flow diagram

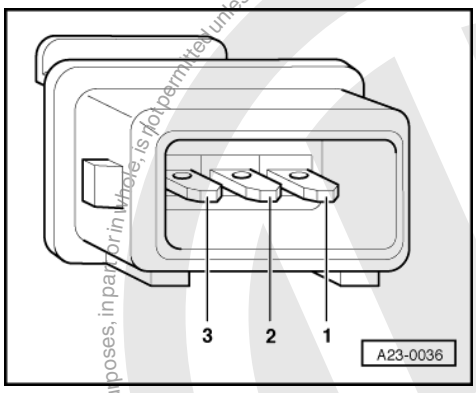

Test sequence

- Switch off ignition.
- Disconnect connector for engine speed sender.
  =>Fitting location overview, Page 46 .
- -> Measure resistance between connector contacts 1+2.
  Specification: 1.0 ... 1.5 kω

If the specification is not obtained:

- Renew engine speed sender -G28.

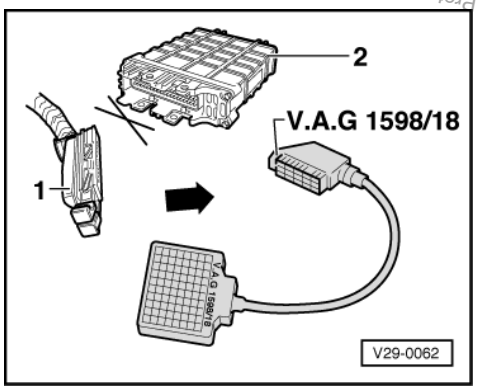

=> Repair group 13; Dismantling and assembling engine Dismantling and assembling engine

If the specification is obtained:

Vehicles with 68-pin control unit

- -> Connect test box V.A.G 1598/18 to control unit wiring loom.

Protected by copyright. Copyright by Volkswagen AG. Volkswagen AG does not guarantee or accept any liability with respect to the correctness of information in this document. Copyright by Volkswagen AG. Reproduction for commercial purposes, in part or in whole, is not permitted unless authorised by Volkswagen AG.
satelettronica

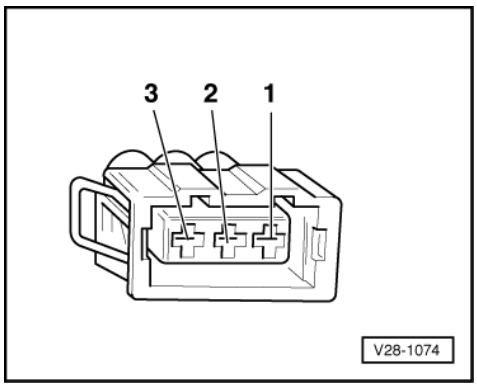

- -> Check wiring between test box and 3 pin connector for open circuit according to current flow diagram.
  Contact 1+ socket 33
  Contact 2+ socket 8
  Contact 3+ socket 1
  Wire resistance: max. 1.5 ω
- Check wiring at 3 pin connector for short circuit to one another according to current flow diagram.
  Specification: ∞ω

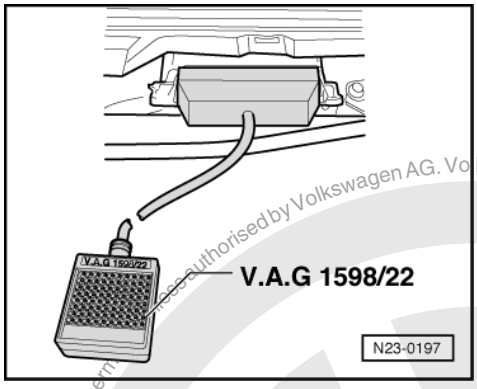

Vehicles with 80-pin control unit

- -> Connect test box V.A.G 1598/22 to control unit wiring harness.

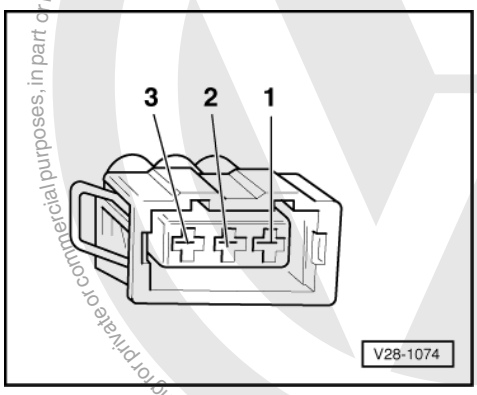

- -> Check wiring between test box and 3 pin connector for open circuit according to current flow diagram.
  Contact 1+ socket 69
  Contact 2+ socket 67
  Contact 3+ socket 71
  Wire resistance: max. 1.5 ω
- Check wiring at 3 pin connector for short circuit to one another according to current flow diagram.
  Specification: ∞ω

satelettronica
Copyright by Volkswagen AG. Volkswagen AG does not guarantee or accept any liability with respect to the correctness of information in this document. Copyright by Volkswagen AG. Transmitted or reproduced for private or commercial purposes, in part or in whole, is not permitted unless authorised by Volkswagen AG.

Continued for all vehicles

If no wiring fault is detected:

- Renew Diesel direct injection system control unit (J248) => Page 117 .

2.4 - Checking intake manifold pressure sender and altitude sender

(Only engine codes AFN, AHU, ALE)

Both pressure senders are located in the Diesel direct injection system control unit.

Special tools, workshop equipment, testers, measuring instruments and auxiliary items required

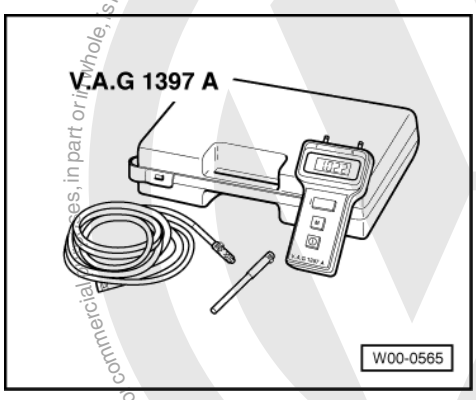

- Fault reader V.A.G 1551 or vehicle system tester V.A.G 1552 with cable V.A.G 1551/3
- -> V.A.G 1397 A Turbocharger tester

Test sequence

- Connect the fault reader V.A.G 1551 (V.A.G 1552) and with ignition switched on select engine electronics control unit with the "Address word" 01.
  (Connecting fault reader and selecting engine electronics control unit => Page 2 .)

-> Indicated on display:

```
Rapid data transfer      HELP
Select function XX
```

- Press keys 0 and 8 for the function "Read measured value block" and confirm entry with Q key.

-> Indicated on display:

```
Read measured value block      HELP
Input display group number XXX
```

- Press keys 0, 1 and 0 for "Display group number 10" and confirm entry with Q key.

-> Indicated on display:

```
Read measured value block 10
0 mg/H      1027 mbar      1013 mbar      0
%
```

- Compare display in display zone 2 (altitude sender -F96) and display zone 3 (intake manifold pressure sender -G71).

Specification: Pressures the same
(Tolerance ±30 mbar)

satelettronica

If the specification is not obtained:

- Compare pressure display with a barometer (e.g. turbocharger test unit V.A.G 1397/A).
  Tolerance ±30 mbar

Value in display zone 3 deviates:

- Pull pressure hose off control unit.

Value in display zone 3 still deviates:

- Press the ⇒key.
- Press keys 0 and 6 for the "End data transfer" function and confirm input with the Q key.
- Switch off ignition.
- Renew Diesel direct injection system control unit (J248) => Page 117 .

2.5 - Checking coolant temperature sender

Special tools, workshop equipment, testers, measuring instruments and auxiliary items required

- Fault reader V.A.G 1551 or vehicle system tester V.A.G 1552 with cable V.A.G 1551/3
- Test box V.A.G 1598/18 or V.A.G 1598/22
- Hand multimeter V.A.G 1526 or multimeter V.A.G 1715
- Adapter set V.A.G 1594
- Current flow diagram

Test sequence

- Connect fault reader V.A.G 1551 (V.A.G 1552) and select engine electronics control unit with the "Address word" 01. When doing this the engine must be running at idling speed.
  (Connecting fault reader and selecting engine electronics control unit => Page 2 .)

-> Indicated on display:

```
Rapid data transfer      HELP
Select function XX
```

- Press keys 0 and 8 for the function "Read measured value block" and confirm entry with Q key.

-> Indicated on display:

```
Read measured value block     HELP
Input display group number XXX
```

- Press keys 0, 0 and 7 for "Display group number 7" and confirm entry with Q key.
- ->

```
Read measured value block 7
15.4 5C          15.9 5C     16.7 5C
```

  Indicated on display:
- Observe coolant temperature figure in display zone 4. The temperature figure must
  Increase uniformly and without interruption.
- In case of faults the fuel temperature is displayed as a substitute.
- If no realistic display appears in display zone 4 or the fuel temperature is displayed as a substitute. Check coolant temperature sender and wiring connections to sender as follows:
- Press the ⇒key.
- Press keys 0 and 6 for the "End data transfer" function and confirm input with the Q key.
- Switch off ignition.

Protected by copyright. Copyright by Volkswagen AG. Copying for private or commercial purposes, in whole or in part, is not permitted unless authorised by Volkswagen AG. Volkswagen AG does not guarantee or accept any liability with respect to the correctness of information in this document.
satelettronica

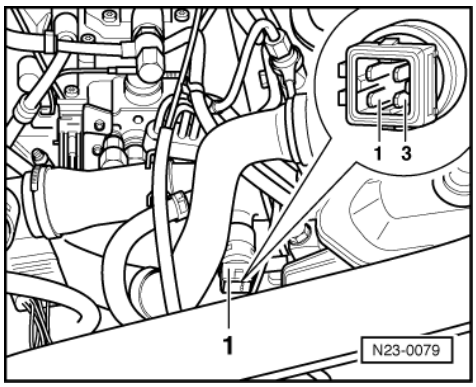

- -> Pull connector off coolant temperature sender -1-.
- Measure resistance between sender contacts 1+3.

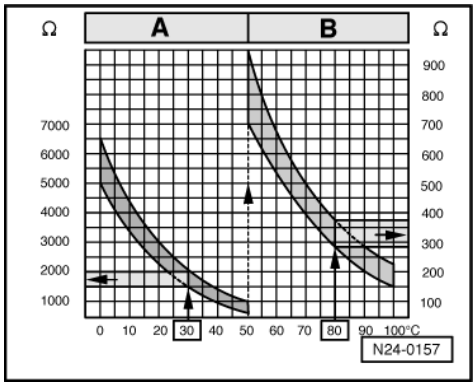

-> Specification see diagram

Scale A shows resistance values for temperature range 0...50 °C and scale B the values for temperature range 50...100 °C.

Examples:

- 30 °C corresponds to a resistance from 1500...2000 ω
- 80 °C corresponds to a resistance from 275...375 ω

If the specification is not obtained:

- Replace coolant temperature sender (G62).

If the specification is obtained:

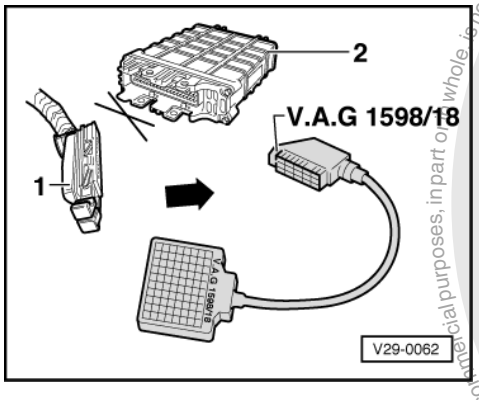

Vehicles with 68-pin control unit

- -> Connect test box V.A.G 1598/18 to control unit wiring loom.

satelettronica
Protected by copyright. Copying for private or commercial purposes, in part or in whole, is not permitted unless authorised by Volkswagen AG. Volkswagen AG does not guarantee or accept any liability with respect to the correctness of information in this document. Copyright by Volkswagen AG.

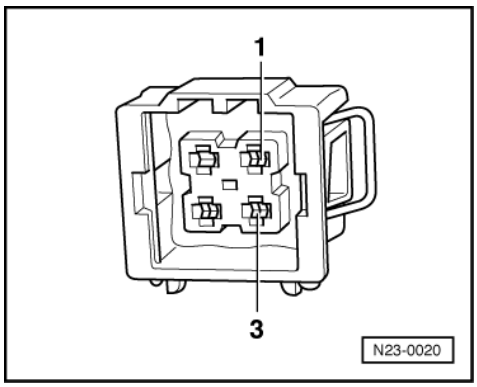

- -> Check wiring between test box and 2 pin connector for open circuit according to current flow diagram.
  Contact 3+ socket 14
  Contact 1+ socket 33
  Wire resistance: max. 1.5 ω
- Additionally check wires for short to one another, to vehicle earth and to battery positive.
  Specification: ∞ω

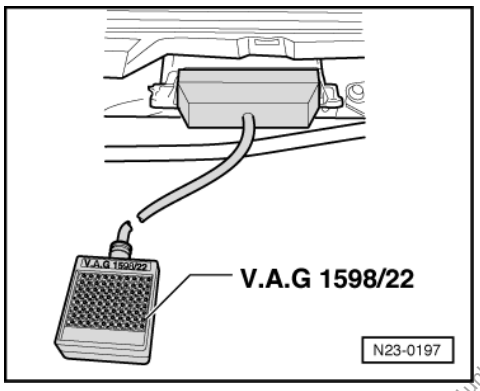

Vehicles with 80-pin control unit

- -> Connect test box V.A.G 1598/22 to control unit wiring harness.

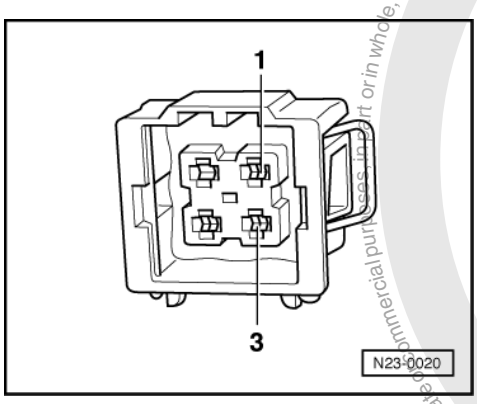

- -> Check wiring between test box and 2 pin connector for open circuit according to current flow diagram.
  Contact 3+ socket 54
  Contact 1+ socket 70
  Wire resistance: max. 1.5 ω
- Additionally check wires for short to one another, to vehicle earth and to battery positive.
  Specification: ∞ω

Continued for all vehicles

If no wiring fault is detected:

Protected by copyright. Copying for private or commercial purposes, in part or in whole, is not permitted unless authorised by Volkswagen AG. Volkswagen AG does not guarantee or accept any liability with respect to the correctness of information in this document. Copyright by Volkswagen AG.
satelettronica

- Renew Diesel direct injection system control unit (J248) => Page 117 .

2.6 - Checking brake light switch and brake pedal switch

Because the injection system operates with an accelerator pedal sender (potentiometer) which may be defective, the engine is regulated for reasons of safety when the brakes are operated. To do this the control unit requires signals from the brake light switch and also the brake pedal switch. This means that if the brakes are operated when the accelerator pedal is held at a constant position the engine is immediately reduced to idling speed. Incorrectly adjusted switches may lead to unrequired regulating action

Special tools, workshop equipment, testers, measuring instruments and auxiliary items required

- Fault reader V.A.G 1551 or vehicle system tester V.A.G 1552 with cable V.A.G 1551/3
- Test box V.A.G 1598/18 or V.A.G 1598/22
- Hand multimeter V.A.G 1526 or multimeter V.A.G 1715
- Adapter set V.A.G 1594
- Current flow diagram

Test sequence

- Connect the fault reader V.A.G 1551 (V.A.G 1552) and with ignition switched on select engine electronics control unit with the "Address word" 01.
  (Connecting fault reader and selecting engine electronics control unit => Page 2 .)

-> Indicated on display:

```
Rapid data transfer      HELP
Select function XX
```

- Press keys 0 and 8 for the function "Read measured value block" and confirm entry with Q key.

-> Indicated on display:

```
Read measured value block      HELP
Input display group number XXX
```

- Press keys 0, 0 and 6 for "Display group number 6" and confirm entry with Q key.
- Observe display in display zone 2.

-> Specification: 0 0 0

```
Read measured value block 6
0 km/h     0 0 0      000000     255
```

- Operate brake pedal slowly.

-> Specification: 0 1 1
Both displays must change from 0 to 1 at same time.

```
Read measured value block 6
0 km/h     0 1 1      000000     255
```

  - Centre display = Brake pedal switch
  - Right-hand display = Brake light switch

  If no change takes place: adjust brake pedal switch switch point by turning the switch or adjust brake light switch point by moving the plunger.

- If one or both of the displays do not change from 0 to 1. Check switches or wiring connections to switches as described in the following.

Checking brake pedal switch (F47)

- Press the ⇒key.
- Press keys 0 and 6 for the "End data transfer" function and confirm input with the Q key.

Copyright by Volkswagen AG. Volkswagen AG does not guarantee or accept any liability with respect to the correctness of information in this document. Copyright by Volkswagen AG. Reproduction or publication in whole or in part only permitted with the express authorisation of Volkswagen AG. Reproduced by copyright
satelettronica

- Switch off ignition.

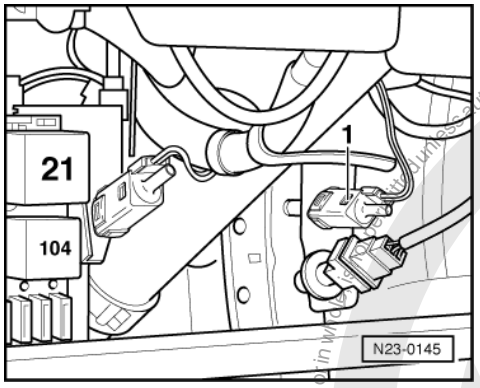

- -> Pull connector off brake pedal switch -1-.
- Measure resistance between switch contacts.
  Specification:
  Brake pedal not depressed: under 10 ω
  Brake pedal depressed:∞ω

If the specification is not obtained:

- Replace brake pedal switch (F47).

If the specification is obtained:

Vehicles with 68-pin control unit

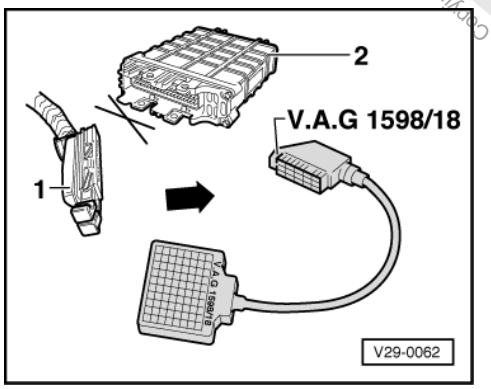

- -> Connect test box V.A.G 1598/18 to control unit wiring loom.

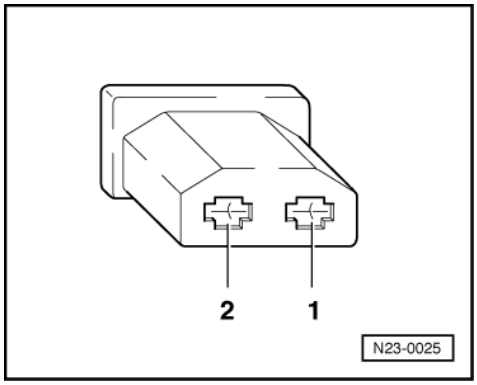

- -> Check wiring between test box and connector for open circuit according to current flow diagram.
  Contact 1+ socket 20
  Contact 2+ socket 33
  Wire resistance: max. 1.5 ω
- Additionally check wires for short to one another, to vehicle earth and to battery positive.

Protected by copyright. Copying for private or commercial purposes, in any form or by any means, is not permitted unless authorised by Volkswagen AG. Volkswagen AG does not guarantee or accept any liability with respect to the correctness of information in this document. Copyright by Volkswagen AG.
satelettronica

Specification: ∞ω

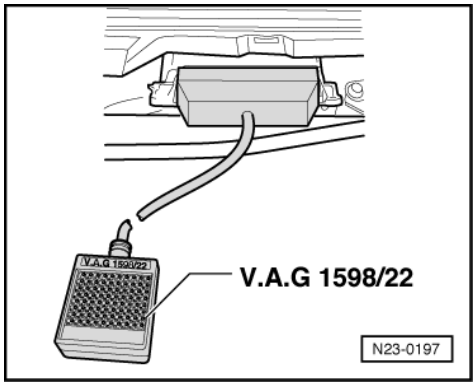

Vehicles with 80-pin control unit

- -> Connect test box V.A.G 1598/22 to control unit wiring harness.

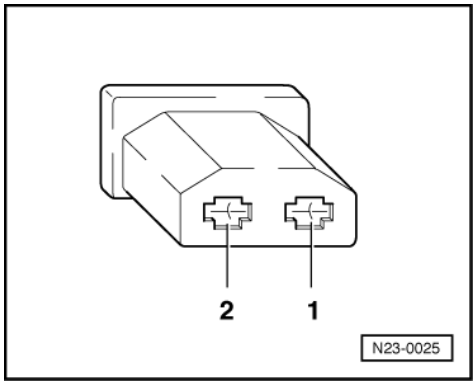

- -> Check wiring between test box and connector for open circuit using current flow diagram.
  Contact 1+socket 28
  Contact 2+socket 9
  Wire resistance: max. 1.5 ω
- Additionally check wires for short to one another, to vehicle earth and to battery positive.
  Specification: ∞ω

Checking brake light switch (F)

- Press the ⇒key.
- Press keys 0 and 6 for the "End data transfer" function and confirm input with the Q key.
- Switch off ignition.
- Set multimeter scale to measure voltage and connect between test box sockets.

Vehicles with 68-pin control unit:
Socket 1+44

Vehicles with 80-pin control unit:
Socket 1+20

- Observe voltage display.
  Specification:
  Brake pedal not depressed: 0 Volt
  Brake pedal depressed: approx. battery voltage

No voltage is displayed:

- Check whether brake light functions.

Protected by copyright. Copyright by Volkswagen AG. Volkswagen AG does not guarantee or accept any liability with respect to the correctness of information in this document. Copying for private or commercial purposes, in part or in whole, is not permitted unless authorised by Volkswagen AG.
satelettronica

Brake light OK:

- Check wiring to brake light switch for open/short circuit according to current flow diagram.

=> Current flow diagrams, Electrical fault finding and Fitting locations binder

Brake light not OK:

- Replace brake light switch (F).

2.7 - Checking clutch pedal switch

The clutch pedal switch (F36) informs the control unit when the clutch is being engaged or disengaged. This prevents the engine from jolting when disengaging and engaging and also prevents the engine from racing during disengaging operations when the cruise control system is switched on.

Special tools, workshop equipment, testers, measuring instruments and auxiliary items required

- Fault reader V.A.G 1551 or vehicle system tester V.A.G 1552 with cable V.A.G 1551/3
- Test box V.A.G 1598/18 or V.A.G 1598/22
- Hand multimeter V.A.G 1526 or multimeter V.A.G 1715
- Adapter set V.A.G 1594
- Current flow diagram

Test sequence

- Connect the fault reader V.A.G 1551 (V.A.G 1552) and with ignition switched on select engine electronics control unit with the "Address word" 01.
  (Connecting fault reader and selecting engine electronics control unit => Page 2 .)

-> Indicated on display:

```
Rapid data transfer      HELP
Select function XX
```

- Press keys 0 and 8 for the function "Read measured value block" and confirm entry with Q key.

-> Indicated on display:

```
Read measured value block     HELP
Input display group number XXX
```

- Press keys 0, 0 and 6 for "Display group number 6" and confirm entry with Q key.
- Observe display in display zone 2.

-> Specification: 0 0 0

```
Read measured value block 6
    0 km/h     0     0     0     000000
255
```

- Operate clutch pedal. The left-hand position must change to 1.

-> Specification: 1 0 0

```
Read measured value block 6
    0 km/h     1     0     0     000000
255
```

If the specifications are not obtained:

- Press the ⇒key.
- Press keys 0 and 6 for the "End data transfer" function and confirm input with the Q key.

Protected by copyright. Copying for private or commercial purposes, in part or in whole, is not permitted unless authorised by Volkswagen AG. Volkswagen AG does not guarantee or accept any liability with respect to the correctness of information in this document. Copyright by Volkswagen AG.
satelettronica

- Switch off ignition.

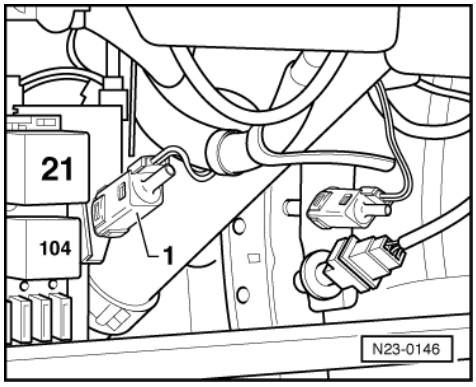

- -> Pull connector off clutch pedal switch -1- .
- Measure resistance at switch contacts.
  Specification
  Clutch not depressed: max. 10 ω
  Clutch depressed: ∞ω

If the specifications are not obtained:

- Replace clutch pedal switch (F36).

If the specifications are obtained:

Vehicles with 68-pin control unit

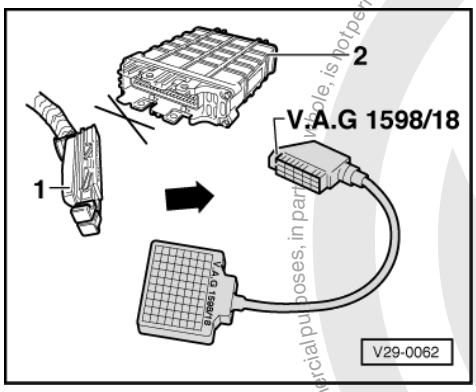

- -> Connect test box V.A.G 1598/18 to control unit wiring loom.

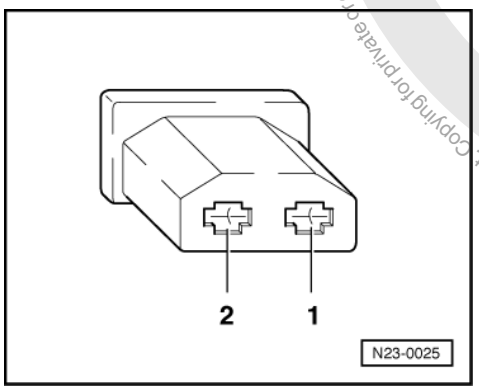

- -> Check wiring between test box and connector for open circuit according to current flow diagram.
  Contact 1+ socket 33
  Contact 2+ socket 17
  Wire resistance: max. 1.5 ω
- Additionally check wires for short to one another, to vehicle earth and to battery positive.

Protected by copyright. Copying for private or commercial purposes, in part or whole, is not permitted unless authorised by Volkswagen AG. Volkswagen AG does not guarantee or accept any liability with respect to the correctness of information in this document. Copyright by Volkswagen AG.
satelettronica

Specification: ∞ω

Vehicles with 80-pin control unit

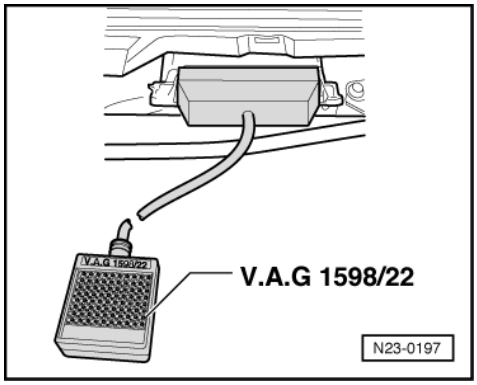

- -> Connect test box V.A.G 1598/22 to control unit wiring harness.

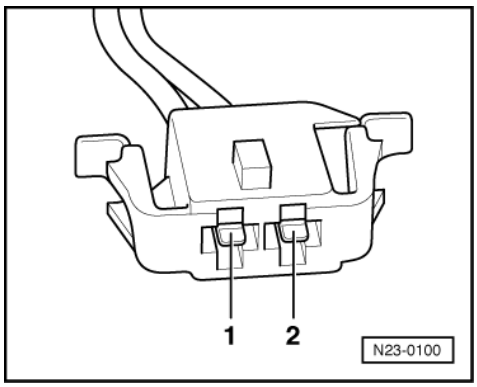

- -> Check wiring between test box and connector for open circuit according to current flow diagram.
  Contact 1+ socket 2
  Contact 1+ socket 28
  Contact 2+ socket 46
  Wire resistance: max. 1.5 ω
- Additionally check wires for short to one another, to vehicle earth and to battery positive.
  Specification: ∞ω

Continued for all vehicles

If no wiring fault is detected:

- Renew Diesel direct injection system control unit (J248) => Page 117 .

2.8 - Checking intake manifold sender

(Only engine codes AFN, AHU, ALE)

Special tools, workshop equipment, testers, measuring instruments and auxiliary items required

- Fault reader V.A.G 1551 or vehicle system tester V.A.G 1552 with cable V.A.G 1551/3
- Test box V.A.G 1598/18
- Hand multimeter V.A.G 1526 or multimeter V.A.G 1715
- Adapter set V.A.G 1594
- Current flow diagram

Test sequence

- Connect fault reader V.A.G 1551 (V.A.G 1552) and select engine electronics control unit with the "Address word" 01. When doing this the engine must be running at idling speed.

Protected by copyright. Copying for private or commercial purposes, in part or in whole, is not permitted unless authorised by Volkswagen AG. Volkswagen AG does not guarantee or accept any liability with respect to the correctness of information in this document. Copyright by Volkswagen AG.
satelettronica

(Connecting fault reader and selecting engine electronics control unit => Page 2 .)

-> Indicated on display:

```
Rapid data transfer      HELP
Select function XX
```

- Press keys 0 and 8 for the function "Read measured value block" and confirm entry with Q key.

-> Indicated on display:

```
Read measured value block      HELP
Input display group number XXX
```

- Press keys 0, 0 and 7 for "Display group number 7" and confirm entry with Q key.

-> Indicated on display:

```
Read measured value block 7
15.4 5C          15.9 5C     16.7 5C
```

- If no realistic display appears in display zone 3 or a substitute temperature of 136.8 °C is displayed, check intake manifold temperature sender and the wiring to the sender as follows:
- Press the ⇒key.
- Press keys 0 and 6 for the "End data transfer" function and confirm input with the Q key.

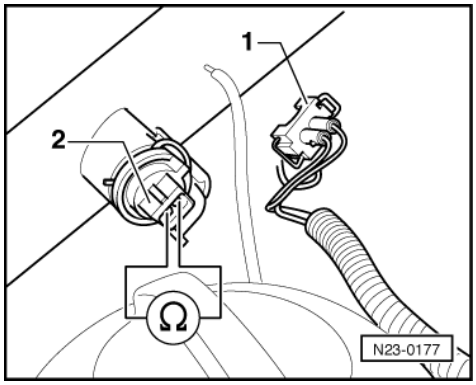

- Switch off ignition.
- -> Pull connector -1- off intake manifold temperature sender -2-.
- Measure resistance between sender contacts.

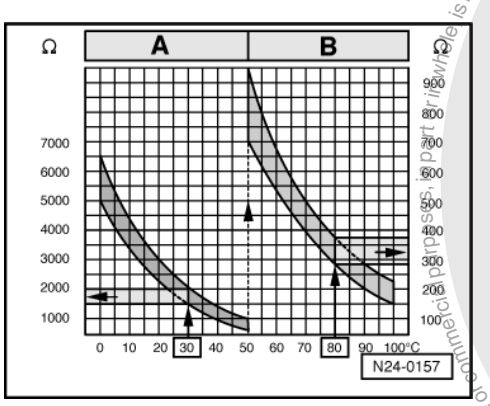

-> Specification see diagram

Scale A shows resistance values for temperature range 0...50 °C and scale B the values for temperature range 50...100 °C.

Examples:

- 30 °C corresponds to a resistance from 1500...2000 ω

Protected by copyright. Copying for private or commercial purposes, in part or in whole is not permitted unless authorised by Volkswagen AG. Volkswagen AG does not guarantee or accept any liability with respect to the correctness of information in this document. Copyright by Volkswagen AG.
satelettronica

- 80 °C corresponds to a resistance from 275...375 ω

If the specification is not obtained:

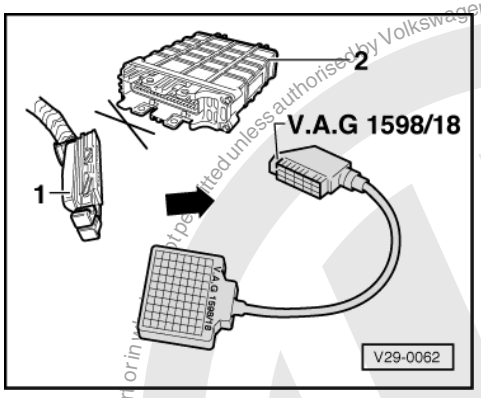

- Replace intake manifold temperature sender (G72).

If the specification is obtained:

- -> Connect test box V.A.G 1598/18 to control unit wiring loom.

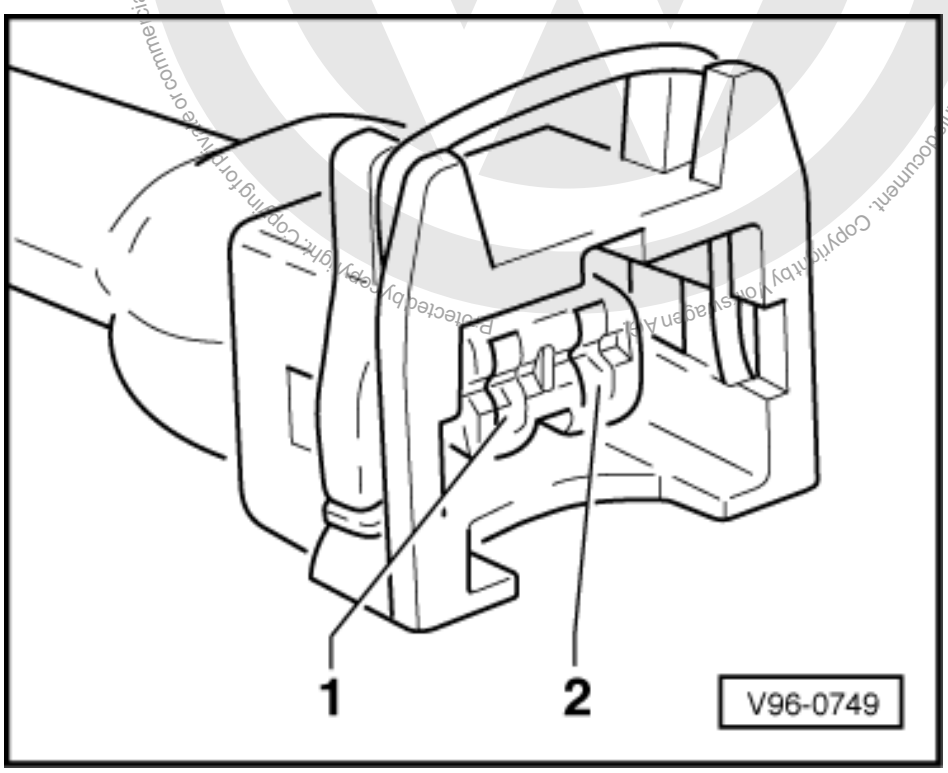

- -> Check wiring between test box and connector for open circuit according to current flow diagram.
  Contact 1+ socket 64
  Contact 2+ socket 33
  Wire resistance: max. 1.5 ω
- Additionally check wires for short to one another, to vehicle earth and to battery positive.
  Specification: ∞ω

If no wiring fault is detected:

- Renew Diesel direct injection system control unit (J248) => Page 117 .

Volkswagen AG. Volkswagen AG does not guarantee or accept any liability with respect to the correctness of information in this document. Copyright by Volkswagen AG.
Protected by copyright. Copying for private or commercial purposes, in part or in whole, is not permitted unless authorised by Volkswagen AG.
satelettronica

2.9 - Checking intake air temperature sender

(Only engine codes AEY, AHB, AKW)

Note:

In case of fault the fault reader V.A.G 1551 displays fault code 00527 for intake manifold temperature sender (G72) for engine codes AHB and AKW.

Special tools, workshop equipment, testers, measuring instruments and auxiliary items required

- Fault reader V.A.G 1551 or vehicle system tester V.A.G 1552 with cable V.A.G 1551/3
- Test box V.A.G 1598/18 or V.A.G 1598/22
- Hand multimeter V.A.G 1526 or multimeter V.A.G 1715
- Adapter set V.A.G 1594
- Current flow diagram

Test sequence

- Connect fault reader V.A.G 1551 (V.A.G 1552) and select engine electronics control unit with the "Address word" 01. When doing this the engine must be running at idling speed.
  (Connecting fault reader and selecting engine electronics control unit => Page 2 .)

-> Indicated on display:

```
Rapid data transfer      HELP
Select function XX
```

- Press keys 0 and 8 for the function "Read measured value block" and confirm entry with Q key.

-> Indicated on display:

```
Read measured value block    HELP
Input display group number XXX
```

- Press keys 0, 0 and 7 for "Display group number 7" and confirm entry with Q key.

-> Indicated on display:

```
Read measured value block 7
15.4 5C          15.9 5C     16.7 5C
```

- If no realistic display appears in display zone 3 or a substitute temperature of 18.9 °C or 136.8 °C is displayed, check intake air temperature sender and the wiring connections to sender as follows:

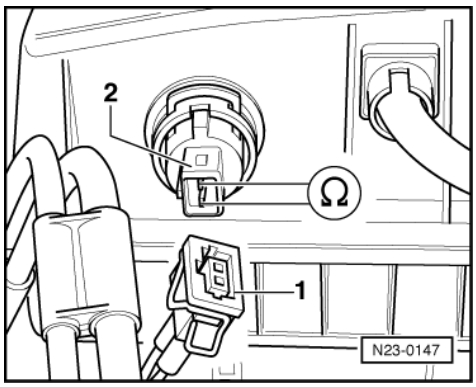

- Press the ⇒key.
- Press keys 0 and 6 for the "End data transfer" function and confirm input with the Q key.
- Switch off ignition.
- -> Pull connector -1- off intake manifold temperature sender -2-.

satelettronica

- Measure resistance between sender contacts.

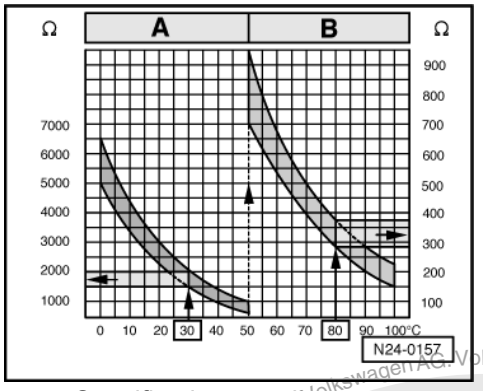

-> Specification see diagram

Scale A shows resistance values for temperature range 0...50 °C and scale B the values for temperature range 50...100 °C.

Examples:

- 30 °C corresponds to a resistance from 1500...2000 ω
- 80 °C corresponds to a resistance from 275...375 ω

If the specification is not obtained:

- Replace intake manifold temperature sender (G42).

If the specification is obtained:

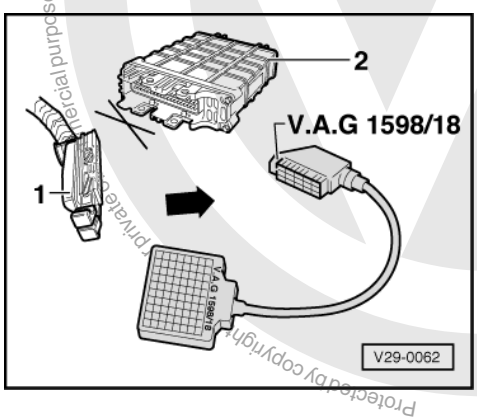

Vehicles with 68-pin control unit

- -> Connect test box V.A.G 1598/18 to control unit wiring loom.

Protected by copyright. Copyright by Volkswagen AG.
Volkswagen AG does not guarantee or accept any liability with respect to the correctness of information in this document.
Copyright by Volkswagen AG. Volkswagen AG authorised unless permitted unless authorised for private or commercial purposes in part or in whole, is not permitted unless authorised
satelettronica

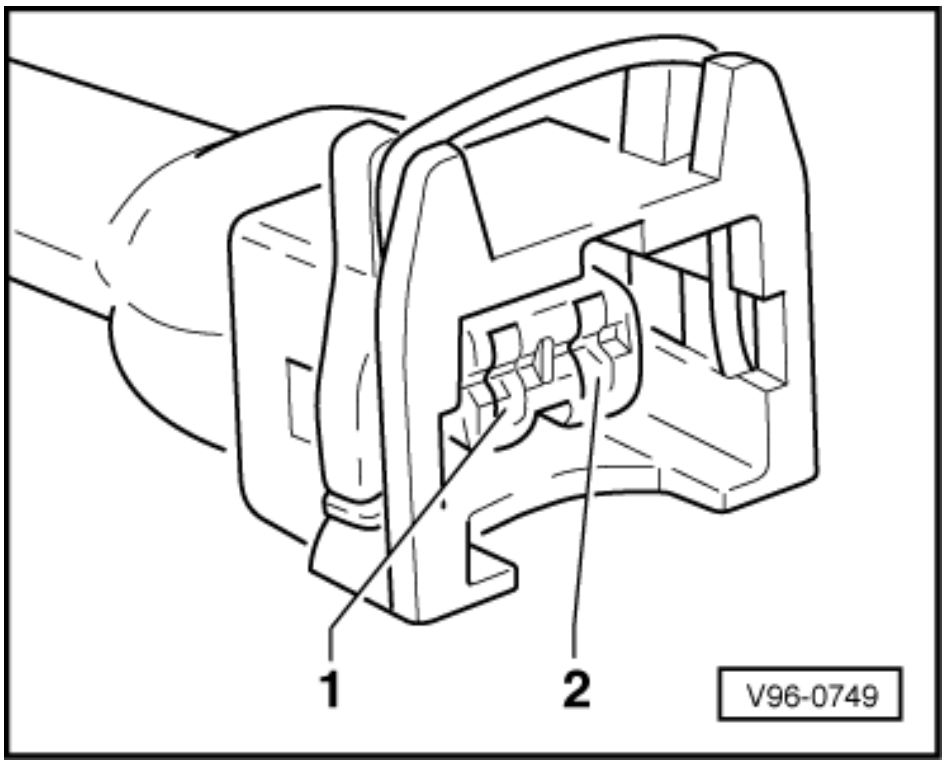

- -> Check wiring between test box and connector for open circuit according to current flow diagram.
  Contact 1+ socket 64
  Contact 2+ socket 33
  Wire resistance: max. 1.5 ω
- Additionally check wires for short to one another, to vehicle earth and to battery positive.
  Specification: ∞ω

Vehicles with 80-pin control unit

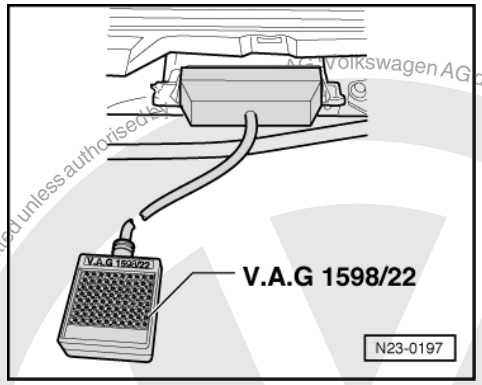

- -> Connect test box V.A.G 1598/22 to control unit wiring harness.

Protected by copyright. Copying for private or commercial purposes, in part or in whole, is not permitted unless authorised by Volkswagen AG. Copyright by Volkswagen AG. Volkswagen AG does not guarantee or accept any liability with respect to the correctness of information in this document.
satelettronica

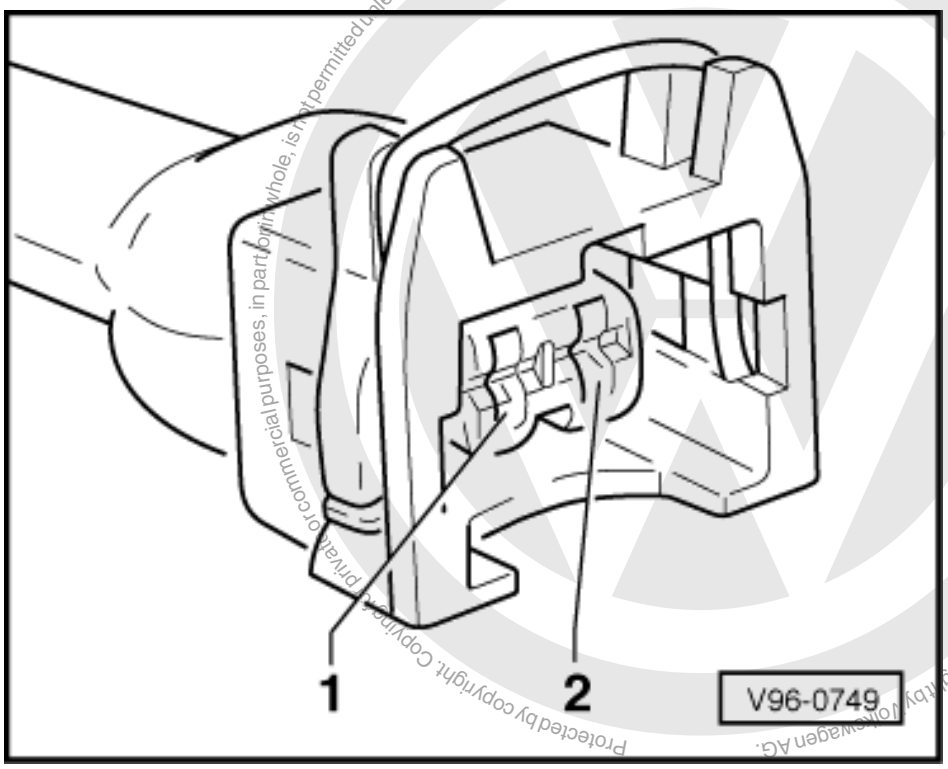

- -> Check wiring between test box and connector for open circuit according to current flow diagram.
  Contact 1+ socket 13
  Contact 2+ socket 25
  Wire resistance: max. 1.5 ω
- Additionally check wires for short to one another, to vehicle earth and to battery positive.
  Specification: ∞ω

Continued for all vehicles

If no wiring fault is detected:

- Renew Diesel direct injection system control unit (J248) => Page 117 .

2.10 - Checking fuel temperature sender

Special tools, workshop equipment, testers, measuring instruments and auxiliary items required

- Fault reader V.A.G 1551 or vehicle system tester V.A.G 1552 with cable V.A.G 1551/3
- Test box V.A.G 1598/18 or V.A.G 1598/22
- Hand multimeter V.A.G 1526 or multimeter V.A.G 1715
- Adapter set V.A.G 1594
- Current flow diagram

Test sequence

- Connect fault reader V.A.G 1551 (V.A.G 1552) and select engine electronics control unit with the "Address word" 01. When doing this the engine must be running at idling speed.
  (Connecting fault reader and selecting engine electronics control unit => Page 2 .)

-> Indicated on display:

```
Rapid data transfer      HELP
Select function XX
```

- Press keys 0 and 8 for the function "Read measured value block" and confirm entry with Q key.

Protected by copyright. Copyright by Volkswagen AG. Volkswagen AG does not guarantee or accept any liability with respect to the correctness of information in this document. Copying for commercial purposes, in part or in whole, is not permitted unless authorised by Volkswagen AG.
satelettronica

-> Indicated on display:

```
Read measured value block     HELP
Input display group number XXX
```

- Press keys 0, 0 and 7 for "Display group number 7" and confirm entry with Q key.

-> Indicated on display:

```
Read measured value block 7
15.4 5C          15.9 5C     16.7 5C
```

- If no realistic display appears in display zone 1 or a substitute temperature of -5.6 °C or -5.4 °C is displayed, check fuel temperature sender and wiring connections to sender as follows:
- Press the ⇒key.
- Press keys 0 and 6 for the "End data transfer" function and confirm input with the Q key.

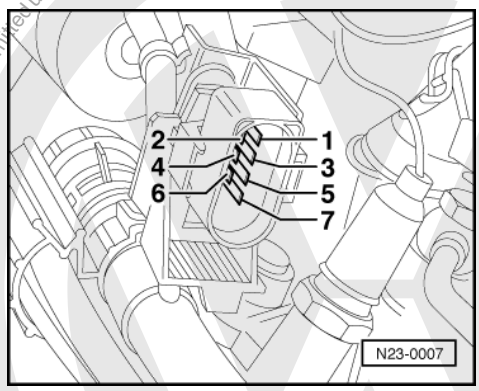

- Switch off ignition.

Vehicles with 68-pin control unit

- -> Disconnect connector for fuel temperature sender (connection to injection pump metering control). Measure sender resistance at contacts 4+7.

Vehicles with 80-pin control unit

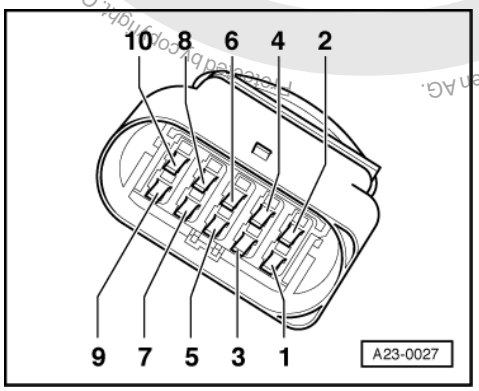

- -> Disconnect 10 pin connector for fuel temperature sender (connection to injection pump metering control).
- Measure sender resistance at contacts 4+7.

Volkswagen AG. Volkswagen AG does not guarantee or accept any liability with respect to the correctness of information in this document. Copyright by Volkswagen AG. Reproduced by permission only for private or commercial purposes, in part or in whole, is not permitted unless authorised by Volkswagen AG. Copyright.
satelettronica

Continued for all vehicles

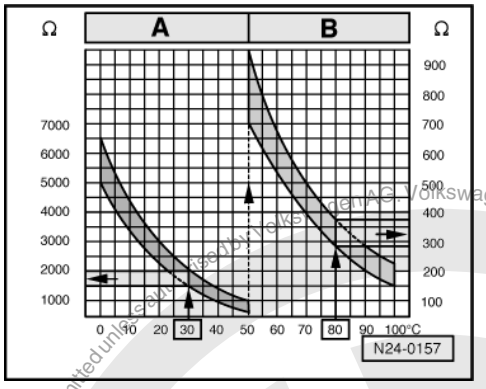

-> Specification see diagram

Scale A shows resistance values for temperature range 0...50 °C and scale B the values for temperature range 50...100 °C.

Examples:

- 30 °C corresponds to a resistance from 1500...2000 ω
- 80 °C corresponds to a resistance from 275...375 ω

If the specification is not obtained:

- Replace injection pump => Page 61 .

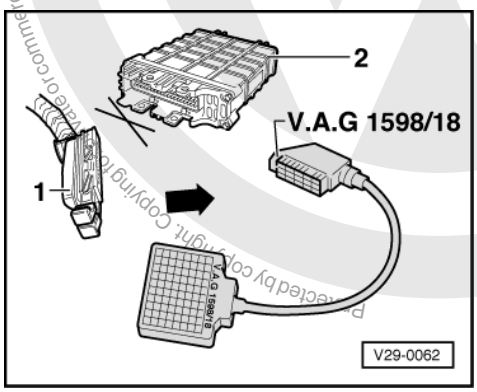

If the specification is obtained:

Vehicles with 68-pin control unit

- -> Connect test box V.A.G 1598/18 to control unit wiring loom.

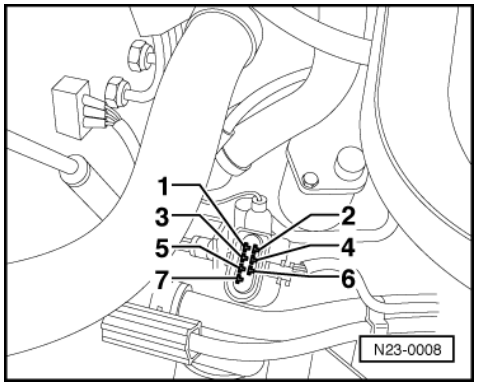

Protected by copyright. Copying for private or commercial purposes, in part or in whole, is not permitted unless authorised by Volkswagen AG. Volkswagen AG does not guarantee or accept any liability with respect to the correctness of information in this document. Copyright by Volkswagen AG.
satelettronica

- -> Check wiring between test box and connector for open circuit according to current flow diagram.
  Contact 7+ socket 63
  Contact 4+ socket 33
  Wire resistance: max. 1.5 ω
- Additionally check wires for short to one another, to vehicle earth and to battery positive.
  Specification: ∞ω

Vehicles with 80-pin control unit

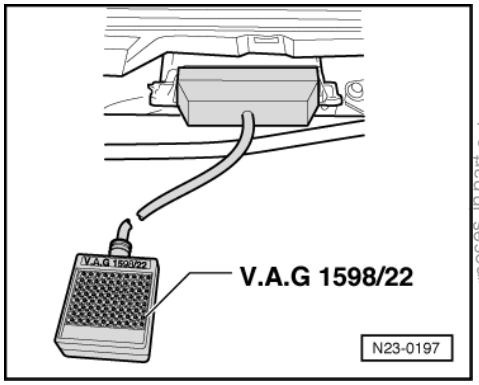

- -> Connect test box V.A.G 1598/22 to control unit wiring harness.

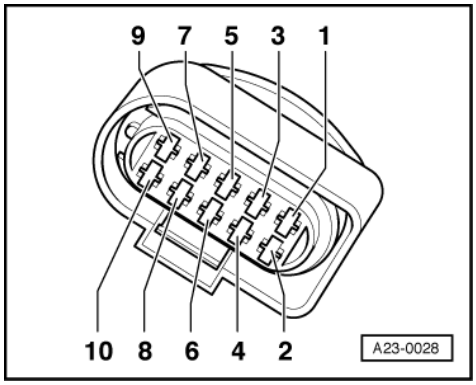

- -> Check wiring between test box and connector for open circuit according to current flow diagram.
  Contact 7+ socket 53
  Contact 4+ socket 76
  Wire resistance: max. 1.5 ω
- Additionally check wires for short to one another, to vehicle earth and to battery positive.
  Specification: ∞ω

Continued for all vehicles

If no wiring fault is detected:

- Renew Diesel direct injection system control unit (J248) => Page 117 .

2.11 - Checking modulating piston movement sender and quantity adjuster

The metering unit is an electro-magnetic swivelling positioner which is controlled by the control unit via a directed duty cycle (on-off ratio). The eccentric shaft on the metering unit moves the modulating piston on the high pressure piston and thereby regulates the quantity of fuel injected.

The modulating piston movement sender informs the control unit of the position of quantity adjuster -N146 and therefore stipulates the amount injected.

Protected by copyright. Copying for private or commercial purposes, in part or in whole, is not permitted unless authorised by Volkswagen AG. Copyright by Volkswagen AG. Volkswagen AG does not guarantee or accept any liability with respect to the correctness of information in this document.
satelettronica

Protected by copyright. Copyright by Volkswagen AG. Volkswagen AG does not guarantee or accept any liability with respect to the correctness of information in this document. Copyright by Volkswagen AG. Not permitted unless authorized by Volkswagen AG, in part or in whole, for commercial purposes, in part or in whole, for private or commercial purposes.

Special tools, workshop equipment, testers, measuring instruments and auxiliary items required

- Fault reader V.A.G 1551 or vehicle system tester V.A.G 1552 with cable V.A.G 1551/3
- Test box V.A.G 1598/18 or V.A.G 1598/22
- Hand multimeter V.A.G 1526 or multimeter V.A.G 1715
- Adapter set V.A.G 1594
- Current flow diagram

Test sequence

- Connect fault reader V.A.G 1551 (V.A.G 1552) and select engine electronics control unit with the "Address word" 01. When doing this the engine must be running at idling speed.
  (Connecting fault reader and selecting engine electronics control unit => Page 2 .)

-> Indicated on display:

```
Rapid data transfer      HELP
Select function XX
```

- Press keys 0 and 8 for the function "Read measured value block" and confirm entry with Q key.

-> Indicated on display:

```
Read measured value block      HELP
Input display group number XXX
```

- Press keys 0, 0 and 1 for "Display group number 1" and confirm entry with Q key.

-> Indicated on display:

```
Read measured value block 1
840 rpm     6.5 mg/H     1.480 V     87.3
5C
```

- Check coolant temperature in display zone 4.
  Specification: at least 85 °C

Continue with check only when coolant temperature is attained.

```
Read measured value block 1
840 rpm     6.5 mg/H     1.480 V     87.3 5C
```

-> Check voltage supply from modulating piston movement sender in display zone 3.
Specification:
Engine code AEY: 1.400...1.800 V
Engine code AFN: 1.300... 1.900 V
Engine code AHB: 1.500... 2.000 V
Engine code AHU: 1.250... 1.700 V
Engine code AKW: 1.500... 2.000 V
Engine code ALE: 1.300... 1.900 V

- If specification is not obtained, check modulating piston movement sender and quantity adjuster as described in following:

Checking modulating piston movement sender (G149).

- Press the ⇒key.
- Press keys 0 and 6 for the "End data transfer" function and confirm input with the Q key.
- Switch off ignition.

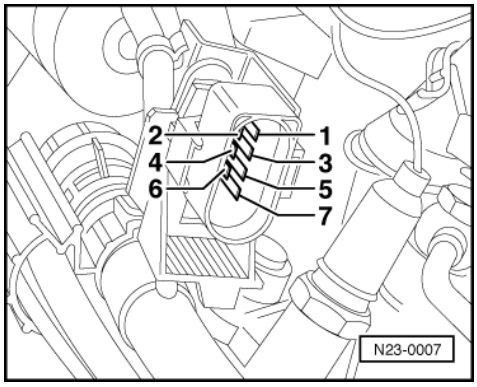

satelettronica

Volkswagen AG. Volkswagen AG does not guarantee or accept any liability with respect to the correctness of information in this document. Copyright by Volkswagen AG.

Vehicles with 68-pin control unit

- -> Disconnect connection for fuel temperature sender (connection to fuel pump quantity adjuster).
- Measure resistance between connector contacts 1 + 2 and 2 + 3.
  Specification: 5 ... 7 ω

Vehicles with 80-pin control unit

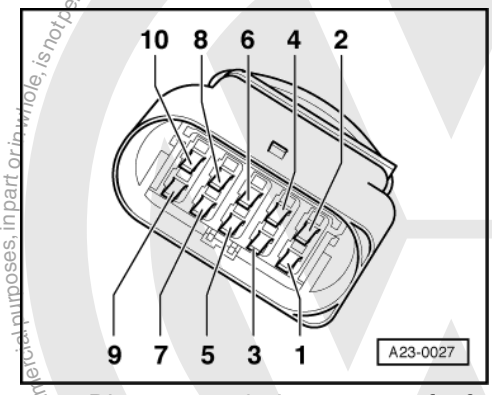

- -> Disconnect 10 pin connector for fuel temperature sender (connection to injection pump metering control).
- Measure resistance between connector contacts 1 + 2 and 2 + 3.
  Specification: 5 ... 7 ω

Continued for all vehicles

If the specification is not obtained:

- Replace injection pump => Page 61 .

If the specification is obtained:

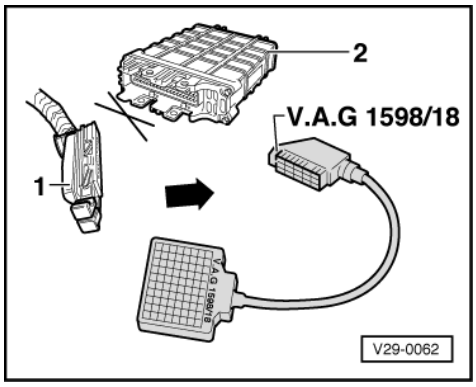

Vehicles with 68-pin control unit

- -> Connect test box V.A.G 1598/18 to control unit wiring loom.

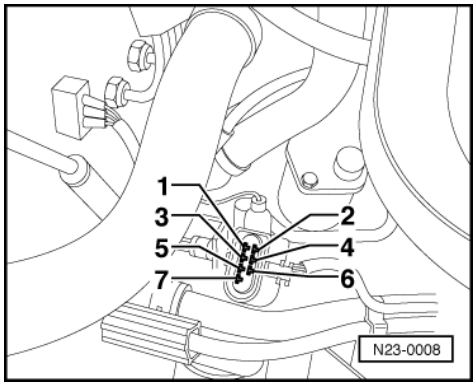

satelettronica

- -> Check wiring between test box and connector for open circuit according to current flow diagram.
  Contact 1+ socket 29
  Contact 2+ socket 7
  Contact 3+ socket 52
  Wire resistance: max. 1.5 ω
- Additionally check wires for short to one another, to vehicle earth and to battery positive.
  Specification: ∞ω

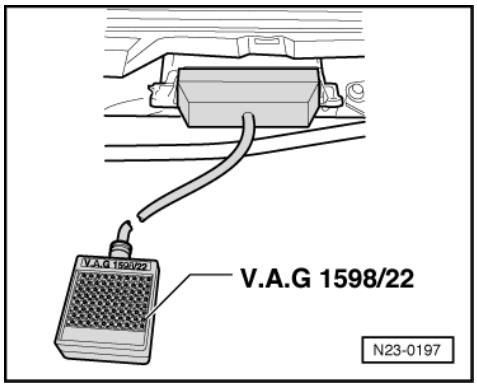

Vehicles with 80-pin control unit

- -> Connect test box V.A.G 1598/22 to control unit wiring harness.

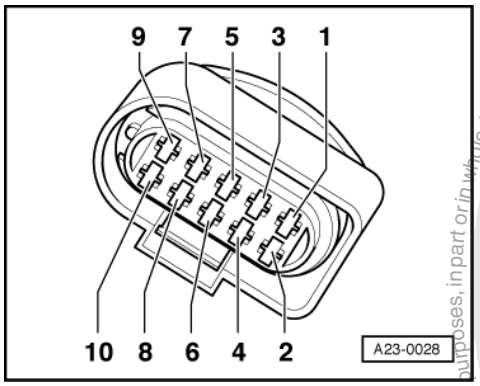

- -> Check wiring between test box and connector for open circuit according to current flow diagram.
  Contact 1+ socket 56
  Contact 2+ socket 57
  Contact 3+ socket 64
  Wire resistance: max. 1.5 ω
- Additionally check wires for short to one another, to vehicle earth and to battery positive.
  Specification: ∞ω

Continued for all vehicles

If no wiring fault is detected:

- Renew Diesel direct injection system control unit (J248) => Page 117 .

Protected by copyright. Copying for private or commercial purposes, in part or in whole, is not permitted unless authorised by Volkswagen AG. Volkswagen AG does not guarantee or accept any liability with respect to the correctness of information in this document. Copyright by Volkswagen AG.
satelettronica

Checking quantity adjuster (N146)

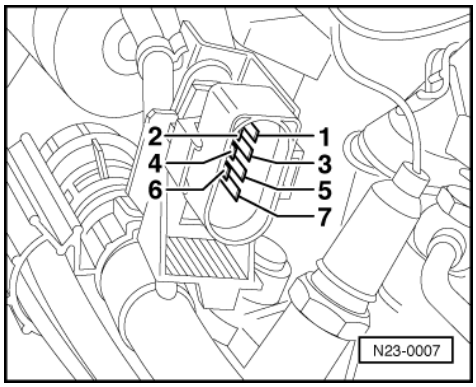

- Press the ⇒key.
- Press keys 0 and 6 for the "End data transfer" function and confirm input with the Q key.
- Switch off ignition.

Vehicles with 68-pin control unit

- -> Disconnect connector for quantity adjuster(connector to injection pump quantity adjuster).

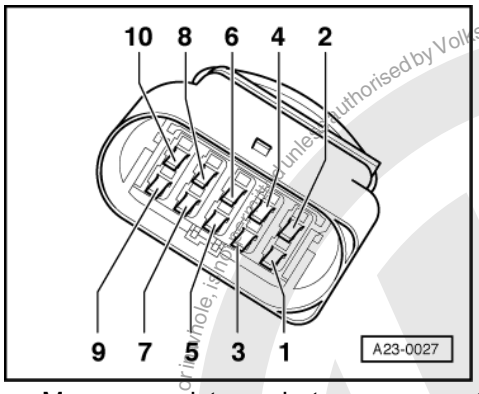

- Measure resistance between connector contacts 5+6.
  Specification: 0.5...2.5 ω

Vehicles with 80-pin control unit

- -> Disconnect 10 pin connector for quantity adjuster(connection to injection pump quantity adjuster).
- Measure resistance between connector contacts 5+6.
  Specification: 0.5...2.5 ω

Continued for all vehicles

If the specification is not obtained:

- Replace injection pump => Page 61 .

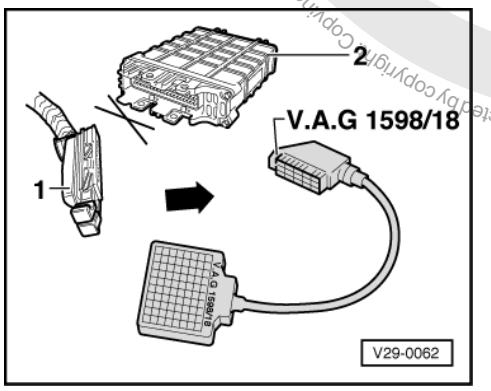

Protected by copyright. Copying for private or commercial purposes, in part or in whole, is not permitted unless authorised by Volkswagen AG. Volkswagen AG does not guarantee or accept any liability with respect to the correctness of information in this document. Copyright by Volkswagen AG.
satelettronica

If the specification is obtained:

Vehicles with 68-pin control unit

- -> Connect test box V.A.G 1598/18 to control unit wiring loom.

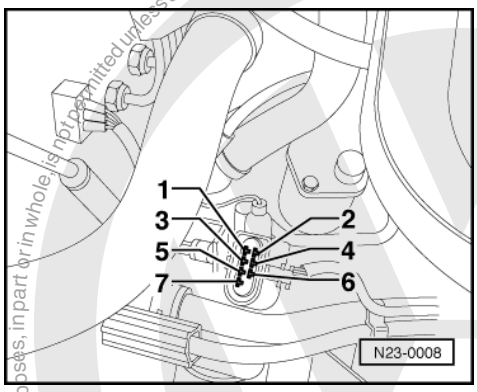

- -> Check wiring between test box and connector for open circuit according to current flow diagram.
  Contact 5+ sockets 23, 45 and 68
  Contact 6+ sockets 4, 5 and 49
  Wire resistance: max. 1.5 ω
- Additionally check wires for short to one another, to vehicle earth and to battery positive.
  Specification: ∞ω

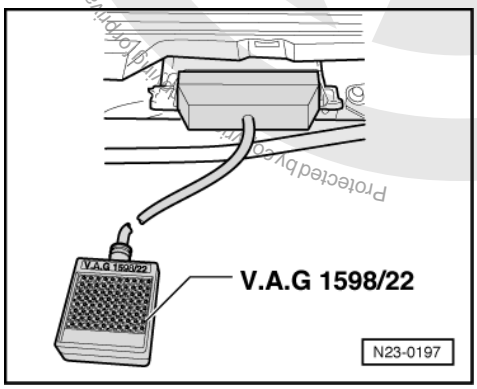

Vehicles with 80-pin control unit

- -> Connect test box V.A.G 1598/22 to control unit wiring harness.

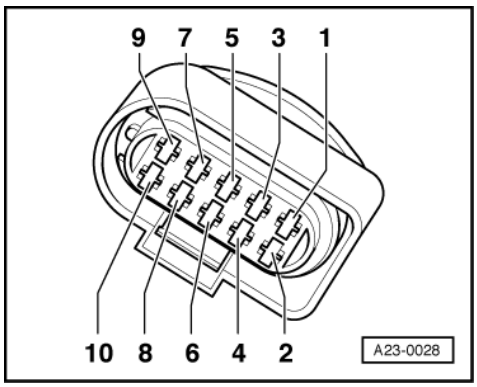

- -> Check wiring between test box and connector for open circuit according to current flow diagram.
  Contact 5+ sockets 2 and 28
  Contact 6+ sockets 59, 66 and 80
  Wire resistance: max. 1.5 ω
- Additionally check wires for short to one another, to vehicle earth and to battery positive.

Protected by copyright. Copying for commercial purposes, in part or in whole, is not permitted unless authorised by Volkswagen AG. Volkswagen AG does not guarantee or accept any liability with respect to the correctness of information in this document. Copyright by Volkswagen AG.
satelettronica

Specification: ∞ω

Continued for all vehicles

If no wiring fault is detected:

- Renew Diesel direct injection system control unit (J248) => Page 117 .

2.12 - Checking needle lift sender

The needle lift sender signal is used to determine the commencement of injection. If it fails the commencement of injection switches to open-loop control (according to engine speed and engine load). During normal operation the commencement of injection is controlled by a closed-loop function (according to engine speed, engine load and temperature).

Special tools, workshop equipment, testers, measuring instruments and auxiliary items required

- Test box V.A.G 1598/18 or V.A.G 1598/22
- Hand multimeter V.A.G 1526 or multimeter V.A.G 1715
- Adapter set V.A.G 1594
- Current flow diagram

Test sequence

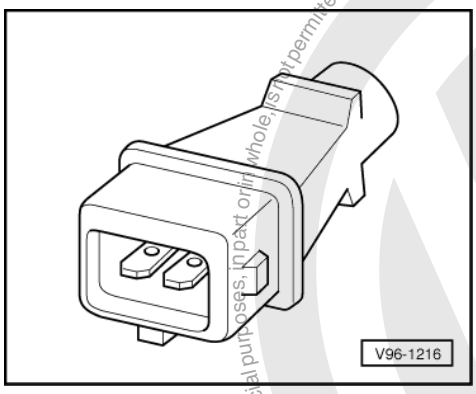

- Switch off ignition.
- Disconnect connector for needle lift sender => Fitting location overview, Page 46 .
- -> Measure resistance between connector contacts.
  Specification: 80...120 ω

If the specification is not obtained:

- Replace No. 3 cylinder injector with needle lift sender (G80) => Page 55 , item 15 .

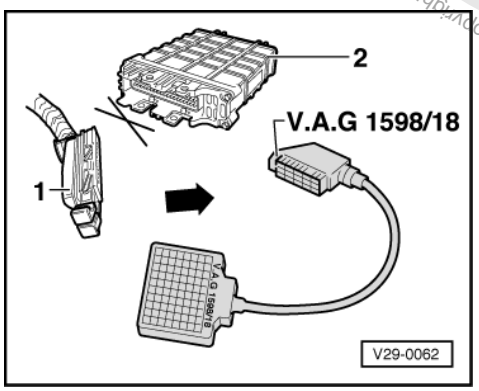

Protected by copyright. Copying for private or commercial purposes, in part or in whole, is not permitted unless authorised by Volkswagen AG. Volkswagen AG does not guarantee or accept any liability with respect to the correctness of information in this document. Copyright by Volkswagen AG.
satelettronica

If the specification is obtained:

Vehicles with 68-pin control unit

- -> Connect test box V.A.G 1598/18 to control unit wiring loom.

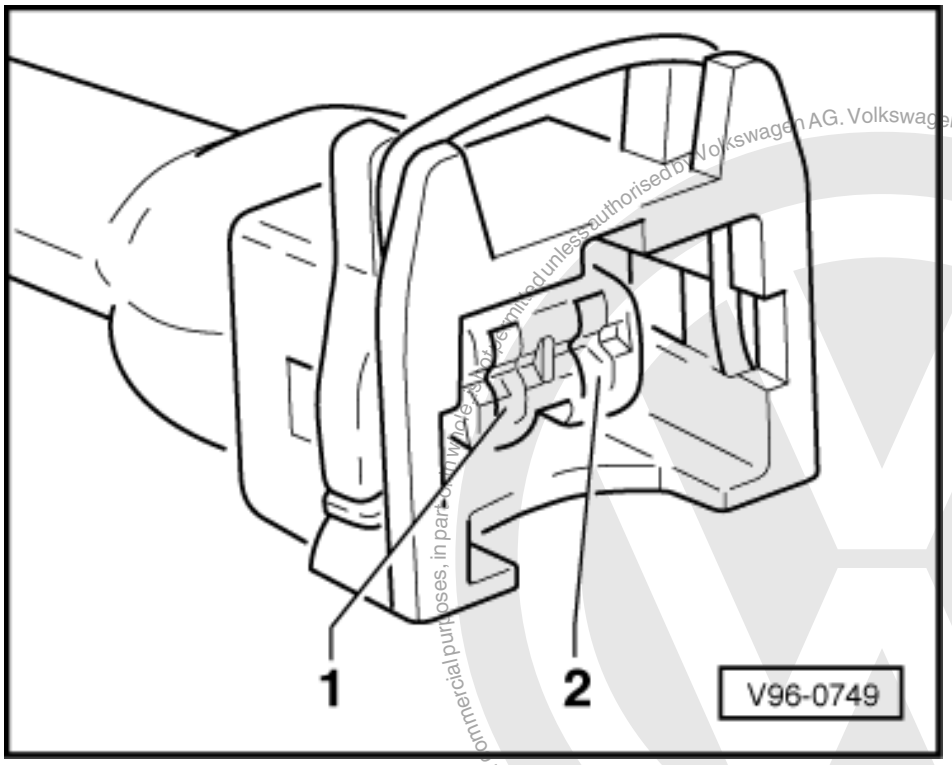

- -> Check wiring between test box and connector for open circuit according to current flow diagram.
  Contact 1+ socket 12
  Contact 2+ socket 11
  Wire resistance: max. 1.5 ω
- Additionally check wires for short to one another, to vehicle earth and to battery positive.
  Specification: ∞ω

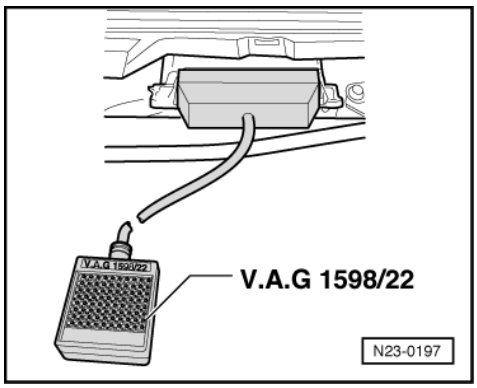

Vehicles with 80-pin control unit

- -> Connect test box V.A.G 1598/22 to control unit wiring harness.

Protected by copyright. Copying for private or commercial purposes, in part or in whole, is not permitted unless authorised by Volkswagen AG. Volkswagen AG does not guarantee or accept any liability with respect to the correctness of information in this document. Copyright by Volkswagen AG.
satelettronica

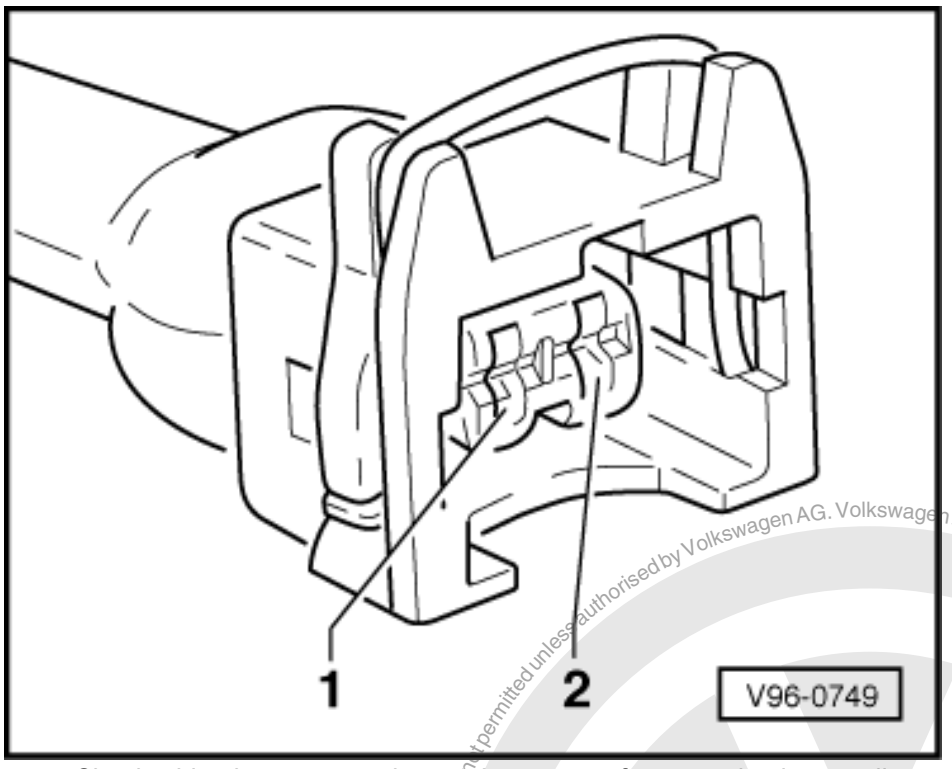

- -> Check wiring between test box and connector for open circuit according to current flow diagram.
  Contact 1+ socket 62
  Contact 2+ socket 55
  Wire resistance: max. 1.5 ω
- Additionally check wires for short to one another, to vehicle earth and to battery positive.
  Specification: ∞ω

Continued for all vehicles

If no wiring fault is detected:

- Renew Diesel direct injection system control unit (J248) => Page 117 .

2.13 - Checking injection timing control range

Special tools, workshop equipment, testers, measuring instruments and auxiliary items required

- Fault reader V.A.G 1551 or vehicle system tester V.A.G 1552 with cable V.A.G 1551/3
- Test box V.A.G 1598/18 or V.A.G 1598/22
- Hand multimeter V.A.G 1526 or multimeter V.A.G 1715
- Adapter set V.A.G 1594
- Current flow diagram

Engine codes AEY, AHB, AHU

Engine codes AFN, AKW, ALE =>Page 105

The control range of the injection adjuster can be checked with help of final control element test and at the same time calling-up measured value block 04. To do this it is required to activate the control element Commencement of injection valve -N108 and then exiting the final control element test with key -C-. Using this sequence the commencement of injection valve continues to be pulsed so that with help of measured value block 04 (display zone 3) the injection adjuster control range can be read.

Protected by copyright. Copying for private or commercial purposes, in part or in whole, is not permitted unless authorised by Volkswagen AG. Volkswagen AG does not guarantee or accept any liability with respect to the correctness of information in this document. Copyright by Volkswagen AG.
satelettronica

Test sequence

- Connect fault reader V.A.G 1551 (V.A.G 1552) and select engine electronics control unit with the "Address word" 01. When doing this the engine must be running at idling speed.
  (Connecting fault reader and selecting engine electronics control unit => Page 2 .)

-> Indicated on display:

```
Rapid data transfer     HELP
Select function XX
```

- Press keys 0 and 3 for the function "Final control diagnosis".

-> Indicated on display:

```
Rapid data transfer     Q
03 Final control diagnosis
```

Note:

The individual control elements are only activated for 30 seconds. Within this period various work sequences must be carried out with the fault reader unit as well as reading the measured values. Therefore read the following work sequence first to become conversant with the procedure.

- Confirm input with Q key.

-> Indicated on display:

```
Final control diagnosis
Commencement of injection valve -N108
```

- Press C key.
- Press keys 0 and 8 for the function "Read measured value block" and confirm entry with Q key.

-> Indicated on display:

```
Read measured value block     HELP
Input display group number XXX
```

- Press keys 0, 0 and 4 for "Display group number 4" and confirm entry with Q key.

-> Indicated on display:

```
Read measured value block 4
840 rpm     0.95 BTDC     0.95 BTDC     3
%
```

The displays in display zones 3 and 4 must fluctuate within following control range:

Engine codes AEY, AHB

- Specification display zone 3
  lower range 1°ATDC...5.0°BTDC
  upper range 14.0...17.4°BTDC
- Specification display zone 4
  lower range 2...5%
  upper range 90...95%

Because the fault reader display is slow the displayed figures vary greatly. Therefore ensure that in display zone 3 the lowest figure lies between 1.0 and 5.0 and the highest figure lies between 14.0 and 17.4 and in display zone 4 the lowest figure lies between 2 and 5, and the highest figure lies between 90 and 95.

Engine code AHU

- Specification display zone 3
  lower range 1°ATDC...4.0°BTDC
  upper range 14.0...17.4°BTDC
- Specification display zone 4
  lower range 2...5%

Protected by copyright. Copying for private or commercial purposes, in part or in whole, is not permitted unless authorised by Volkswagen AG. Volkswagen AG does not guarantee or accept any liability with respect to the correctness of information in this document. Copyright by Volkswagen AG.

sateletronica

upper range 90...95%

Because the fault reader display is slow the displayed figures vary greatly. Therefore ensure that only in display zone 3 the lowest figure lies between 1.0 and 4.0 and the highest figure lies between 14.0 and 17.4 and in display zone 4 the lowest figure lies between 2 and 5, and the highest figure lies between 90 and 95.

Continued for all engine codes

If the specifications are not obtained:

- Check commencement of injection valve => Page 106 .

Engine codes AFN, AKW, ALE

Checking the function of the exhaust gas recirculation is undertaken in function 04 (Basic settings). Using this procedure the exhaust gas recirculation valve is pulsed so that the extremity values for advanced (early) and retarded (late) positions for the timing device can be read in measured value block 004, display zone 3.

Test sequence

- Connect fault reader V.A.G 1551 (V.A.G 1552) and select engine electronics control unit with the "Address word" 01. When doing this the engine must be running at idling speed.
  (Connecting fault reader and selecting engine electronics control unit => Page 2 .)

-> Indicated on display:

```
Rapid data transfer      HELP
Select function XX
```

- Press keys 0 and 4 for the function "Introduction of basic setting" and confirm entry with Q key.

-> Indicated on display:

```
Basic setting      HELP
Input display group number XXX
```

- Press keys 0, 0 and 4 for "Display group number 4" and confirm entry with Q key.

-> Indicated on display:

```
System in basic setting          4
    820 rpm     advanced     7.95 BTDC
47%
```

Specification display zone 3:
Engine codes AFN, ALE 6.5...9.5° BTDC
Engine code AKW 7...9° BTDC

After approx. 10 seconds the timing device is moved to the retarded (late) position.

-> Indicated on display:

```
System in basic setting          4
    820 rpm     retarded     4.45 BTDC
32%
```

Specification display zone 3:
Engine codes AFN, ALE 2.5...5.5° BTDC
Engine code AKW 3...5° BTDC

If the specifications are not obtained:

- Press the ⇒key.
- Press keys 0 and 6 for the "End data transfer" function and confirm input with the Q key.
- Switch off ignition.

satelettronica

- Check commencement of injection valve => Page 106 .

Checking commencement of injection valve

Vehicles with 68-pin control unit

- Disconnect connector on injection pump =>Fitting locations overview, Page 46 .

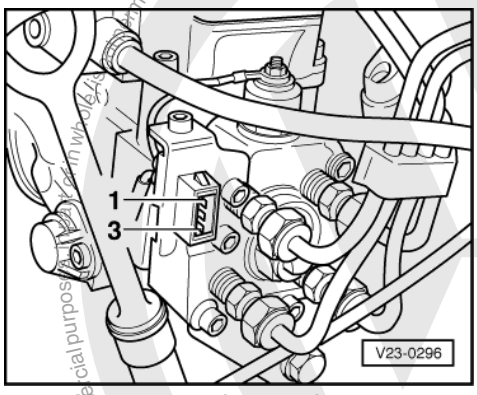

- -> Measure resistance between connector contacts 2 + 3.
  Specification: 12 ... 20 ω

Vehicles with 80-pin control unit

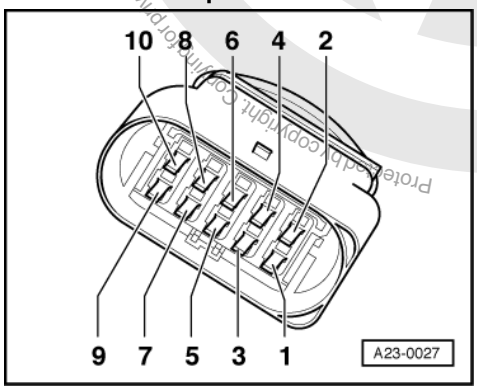

- Disconnect 10 pin connector =>Installation position overview, Page 46 .
- -> Measure resistance between connector contacts 9+10.
  Specification: 12 ... 20 ω

Continued for all vehicles

If the specification is not obtained:

- Replace commencement of injection valve (N108)
  =>Page 56 .

If the specification is obtained:

Vehicles with 68-pin control unit

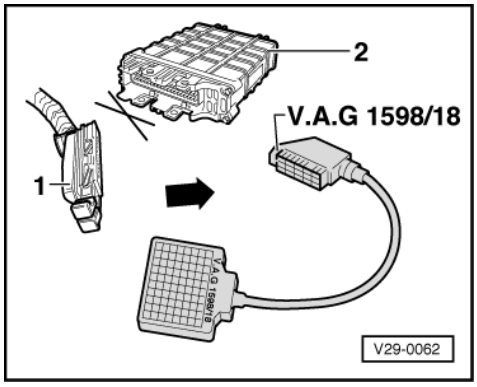

satelettronica

- -> Connect test box V.A.G 1598/18 to control unit wiring loom.

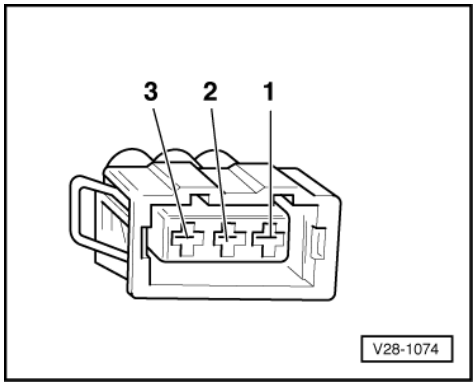

- -> Check wiring between test box and 3 pin connector for open circuit according to current flow diagram.
  Contact 2+ socket 51
  Contact 3+ socket 68
  Wire resistance: max. 1.5 ω
- Additionally check wires for short to one another, to vehicle earth and to battery positive.
  Specification: ∞ω

Vehicles with 80-pin control unit

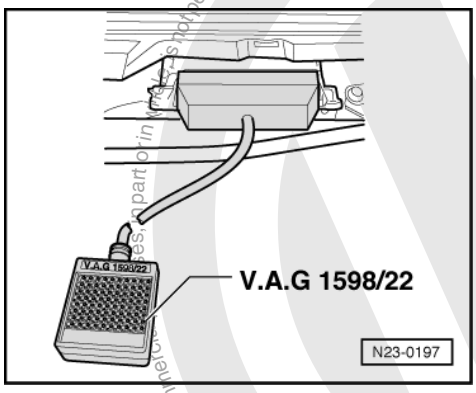

- -> Connect test box V.A.G 1598/22 to control unit wiring harness.

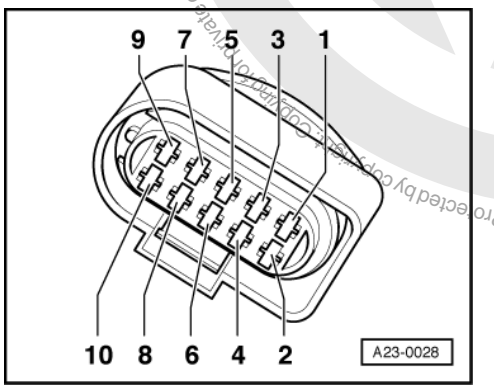

- -> Check wiring between test box and 10 pin connector for open circuit according to current flow diagram.
  Contact 9+ socket 79
  Contact 10+ socket 2+28
  Wire resistance: max. 1.5 ω
- Additionally check wires for short to one another, to vehicle earth and to battery positive.
  Specification: ∞ω

satelettronica

Continued for all vehicles

If no wiring fault is detected:

- Renew Diesel direct injection system control unit (J248) => Page 117 .

2.14 - Checking throttle valve positioner

(Only engine codes AEY, AHB, AKW)

Special tools, workshop equipment, testers, measuring instruments and auxiliary items required

- Test box V.A.G 1598/18 or V.A.G 1598/22
- Hand multimeter V.A.G 1526 or multimeter V.A.G 1715
- Adapter set V.A.G 1594
- Current flow diagram

Test sequence

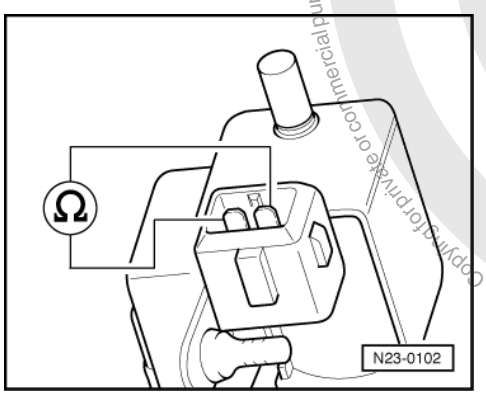

- Switch off ignition.
- Pull connector off throttle valve positioner =>Fitting locations overview, Page 46 .
- -> Measure resistance between throttle valve positioner contacts.
  Specification: 25...45 ω

If the specification is not obtained:

- Renew throttle valve positioner (V60)

If the specification is obtained:

Protected by copyright. Copyright by Volkswagen AG. Volkswagen AG does not guarantee or accept any liability with respect to the correctness of information in this document. Copying for private or commercial purposes, in part or in whole, is not permitted unless authorised by Volkswagen AG.
satelettronica

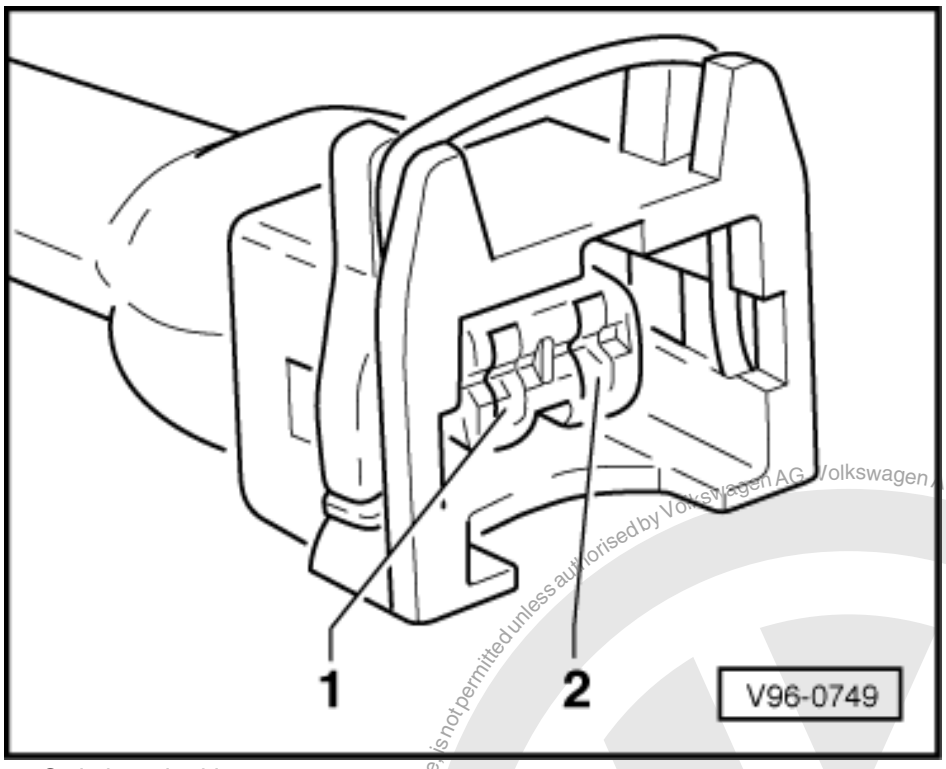

- Switch on ignition.
- -> Measure supply voltage at throttle valve positioner connector contact 1 and at engine earth.
  Specification: approx. battery voltage

If the specification is not obtained:

- Switch off ignition.

Vehicles with 68-pin control unit

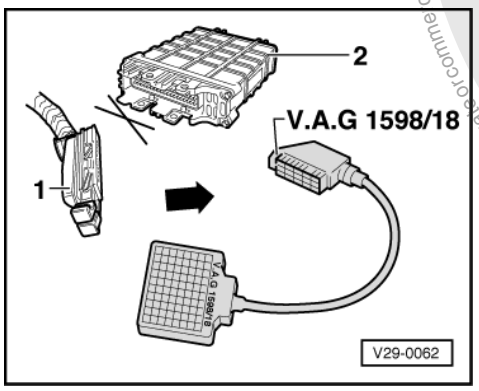

- -> Connect test box V.A.G 1598/18 to control unit wiring loom.
- Check wiring between test box and connector for open circuit according to current flow diagram.
  Contact 1+ socket 68
  Contact 2+ socket 47
  Wire resistance: max. 1.5 ω
- Additionally check wires for short to one another, to vehicle earth and to battery positive.
  Specification: ∞ω

Protected by copyright. Copying for private or commercial purposes, in part or in whole, is not permitted unless authorised by Volkswagen AG. Volkswagen AG does not guarantee or accept any liability with respect to the correctness of information in this document. Copyright by Volkswagen AG.
satelettronica

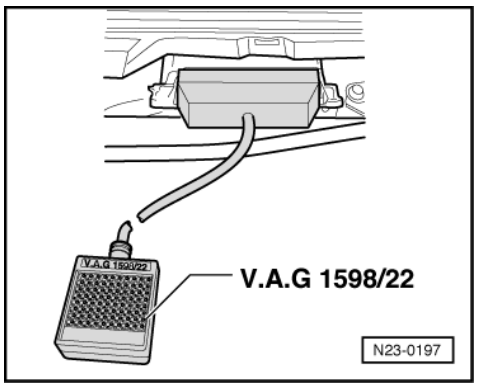

Vehicles with 80-pin control unit

- -> Connect test box V.A.G 1598/22 to control unit wiring harness.

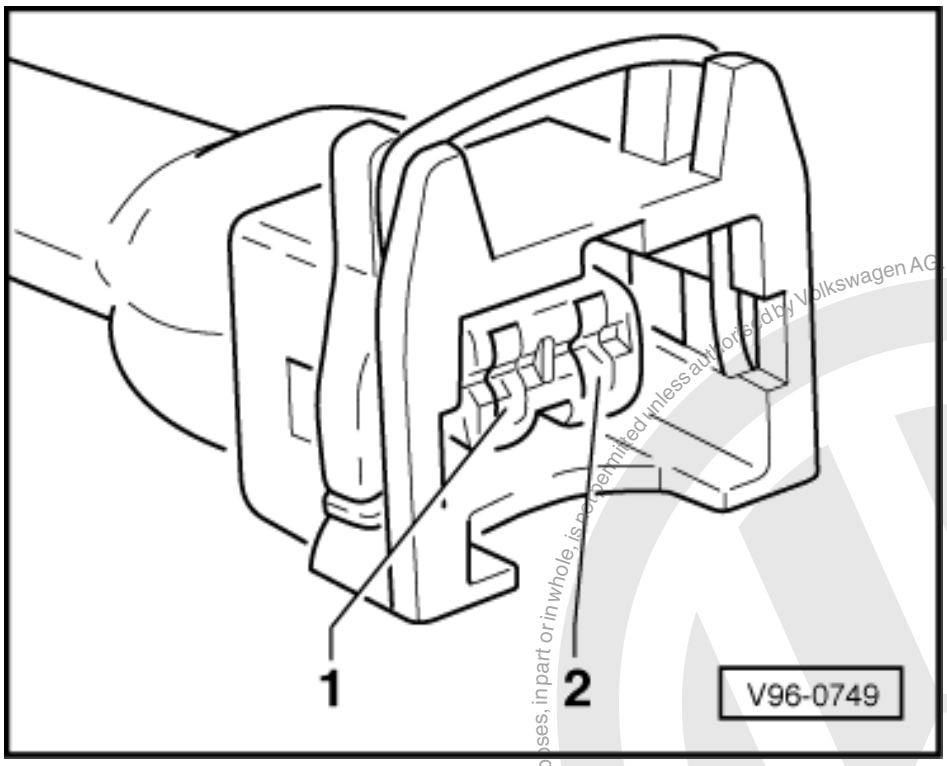

- -> Check wiring between test box and connector for open circuit according to current flow diagram.
  Contact 1+ socket 2+28
  Contact 2+ socket 15
  Wire resistance: max. 1.5 ω
- Additionally check wires for short to one another, to vehicle earth and to battery positive.
  Specification: ∞ω

Continued for all vehicles

If no wiring fault is detected:

- Renew Diesel direct injection system control unit (J248) => Page 117 .

Protected by copyright. Copying for private or commercial purposes, in part or in whole, is not permitted unless authorised by Volkswagen AG. Volkswagen AG does not guarantee or accept any liability with respect to the correctness of information in this document. Copyright by Volkswagen AG.
satelettronica

2.15 - Checking exhaust gas recirculation and air mass meter function

Special tools, workshop equipment, testers, measuring instruments and auxiliary items required

- Fault reader V.A.G 1551 or vehicle system tester V.A.G 1552 with cable V.A.G 1551/3
- Test box V.A.G 1598/18
- Hand multimeter V.A.G 1526 or multimeter V.A.G 1715
- Adapter set V.A.G 1594
- Current flow diagram

Engine code AHU

Engine codes AFN, ALE =>Page 113

The exhaust gas recirculation and air mass meter function can be checked with the help of final control element test and at the same time calling-up measured value block 003. To do this the control element Exhaust gas recirculation (EGR) valve -N18 must be activated and then exit the final control element test with -C- key. Using this sequence the EGR valve continues to be pulsed so that with the help of the measured value block 003 (display zone 3) the extreme values for the EGR (air mass meter) can be read.

Test sequence

- Connect fault reader V.A.G 1551 (V.A.G 1552) and select engine electronics control unit with the "Address word" 01. When doing this the engine must be running at idling speed.
  (Connecting fault reader and selecting engine electronics control unit => Page 2 .)

-> Indicated on display:

```
Rapid data transfer      HELP
Select function XX
```

- Press keys 0 and 3 for the function "Final control diagnosis".

-> Indicated on display:

```
Rapid data transfer      Q
03 Final control diagnosis
```

Note:

The individual control elements are only activated for 30 seconds. Within this period various work sequences must be carried out with the fault reader unit as well as reading the measured values. Therefore read the following work sequence first to become conversant with the procedure.

- Confirm input with Q key.

-> Indicated on display:

```
Final control diagnosis
Commencement of injection valve -N108
```

- Press the ⇒key.

-> Indicated on display:

```
Final control diagnosis
Exhaust gas recirculation valve -N18
```

- Press C key.
- Press keys 0 and 8 for the function "Read measured value block" and confirm entry with Q key.

-> Indicated on display:

```
Read measured value block      HELP
Input display group number XXX
```

satelettronica
Protected by copyright. Copying for private or commercial purposes, in part or in whole, is not permitted unless authorised by Volkswagen AG. Volkswagen AG does not guarantee or accept any liability with respect to the correctness of information in this document. Copyright by Volkswagen AG.

- Press keys 0, 0 and 3 for "Display group number 3" and confirm entry with Q key.

```
Read measured value block 3     "
840 rpm     272 mg/H     268 mg/H     54 %
```

-> Indicated on display:

The displays in display zones 3 and 4 must fluctuate within following control range:

- Specification display zone 3
  Lower range 230...310 mg/stroke
  Upper range 360...480 mg/stroke
- Specification display zone 4
  Lower range 2...5%
  Upper range 90...95%

Because the fault reader display is slow the displayed figures vary greatly. Therefore only ensure that the upper and lower range figures in display zones 3 and 4 are obtained. This means only regard the minimum or maximum values.

If the specifications are not obtained:

- Check air mass meter as follows:
- Press the ⇒key.
- Press keys 0 and 6 for the "End data transfer" function and confirm input with the Q key.

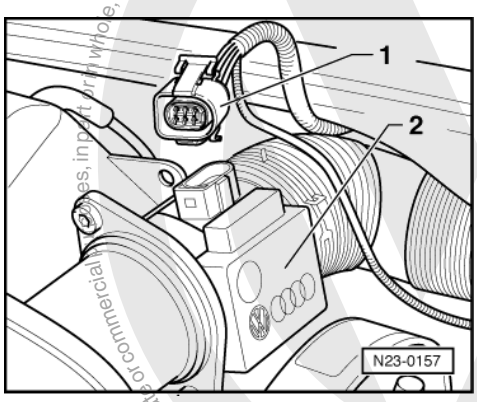

- Switch off ignition.
- -> Pull connector -1- off air mass meter -2-.
- Switch on ignition.

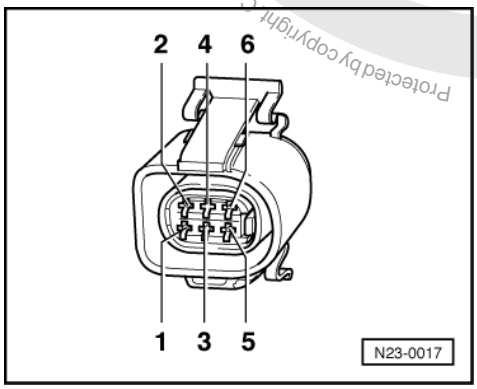

- -> Measure air mass meter voltage supply between following connector contacts:

Connector on -G70 contact	Specification
3 + Earth	App. battery voltage
3 + 5	App. battery voltage
1 + earth	Approx. 5 V

Protected by copyright. Copyright by Volkswagen AG.
Volkswagen AG. Volkswagen AG does not guarantee or accept any liability with respect to the correctness of information in this document.
satelettronica

Connector on -G70 contact	Specification
1 + 5	Approx. 5 V

If the specifications are not obtained:

- Switch off ignition.

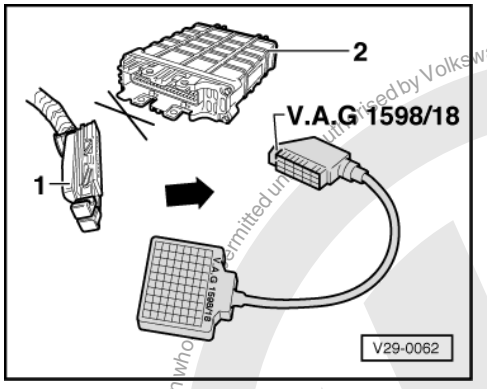

- -> Connect test box V.A.G 1598/18 to control unit wiring loom.
- Check wiring between test box and connections for open circuit according to current flow diagram.
  Contact 1+ socket 19
  Contact 2+ socket 33
  Contact 3+ socket 23
  Contact 5+ socket 1
  Contact 6+ socket 13
  Wire resistance: max. 1.5 ω
- Additionally check wires for short to one another, to vehicle earth and to battery positive.
  Specification: ∞ω

If the specifications are obtained:

- Check exhaust gas recirculation:

=> Repair group 26; Exhaust gas recirculation system, engine codes AFN, AHU, ALE; Checking exhaust gas recirculation Exhaust gas recirculation system, engine codes AFN, AHU, ALE Checking exhaust gas recirculation

If no fault is detected on the air mass meter and the exhaust gas recirculation system:

- Renew Diesel direct injection system control unit (J248) => Page 117 .

Engine codes AFN, ALE

Checking air mass meter

The air mass meter signal is used by the control unit to calculate the quantity injected and to control the required exhaust gas recirculation. The smaller the signal from air mass meter the smaller the quantity of fuel injected.

Test sequence

- Connect fault reader V.A.G 1551 (V.A.G 1552) and select engine electronics control unit with the "Address word" 01. When doing this the engine must be running at idling speed.
  (Connecting fault reader and selecting engine electronics control unit => Page 2 .)

Warning! Secure fault reader to rear seat and operate from this position.

-> Indicated on display:

satelettronica

```
Rapid data transfer      HELP
Select function XX
```

- Press keys 0 and 8 for the function "Read measured value block" and confirm entry with Q key.

-> Indicated on display:

```
Read measured value block      HELP
Input display group number XXX
```

- Press keys 0, 1 and 0 for "Display group number 10" and confirm entry with Q key.
- Observe display in display zone 1.

```
Read measured value block 10
309 mg/H     1027 mbar     1011 mbar     0.0 %
```

-> Specification: 230...420 mg/H

If the specification is not obtained:

- Check exhaust gas recirculation:

=> Repair group 26; Exhaust gas recirculation system, engine codes AFN, AHU, ALE; Checking exhaust gas recirculation Exhaust gas recirculation system, engine codes AFN, AHU, ALE Checking exhaust gas recirculation

If the specification is obtained:

- Accelerate vehicle in 2nd gear from about 1500 rpm using full throttle.
- Press PRINT key on V.A.G 1551 at approx. 3000 rpm. The accelerator pedal must be fully depressed at this moment in time.

```
Read measured value block 10
830 mg/H     1027 mbar     1850 mbar     100 %
```

-> Specification in display zone 4: 100 % (accelerator pedal position)

If the specification is not obtained:

- Repeat test and accelerate vehicle at full throttle.
- ->

```
Read measured value block 10
830 mg/H     1027 mbar     1850 mbar     100 %
```

Specification in display zone 1: above 750 mg/H (mass of air drawn in).

If the specification is not obtained:

- Renew air mass meter.

If a constant 550 mg/H (predetermined replacement value) is displayed in display zone 1.

- Press the ⇒key.
- Press keys 0 and 6 for the "End data transfer" function and confirm input with the Q key.
- Switch off ignition.
- Disconnect connector for air mass meter
  =>Fitting locations overview, Page 46 .
- Switch on ignition.

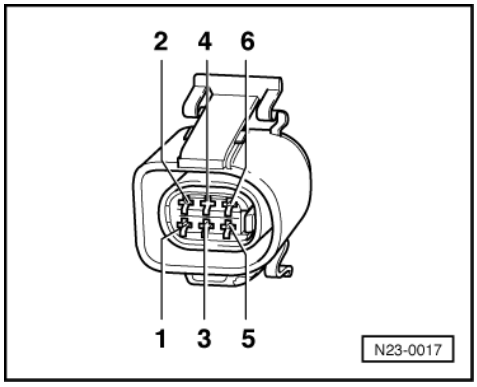

satelettronica

- -> Measure air mass meter voltage supply between following connector contacts:

Connector on -G70 contact	Specification
3 + Earth	App. battery voltage
3 + 5	App. battery voltage
1 + earth	Approx. 5 V
1 + 5	Approx. 5 V

If the specifications are not obtained:

- Switch off ignition.

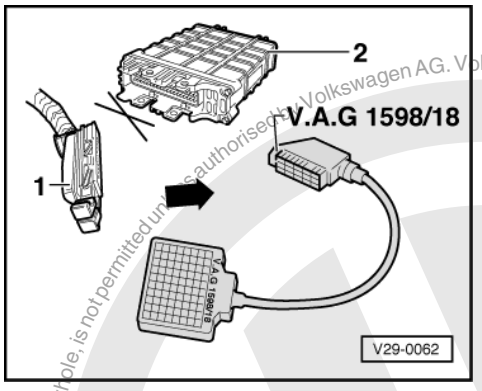

- -> Connect test box V.A.G 1598/18 to control unit wiring loom.

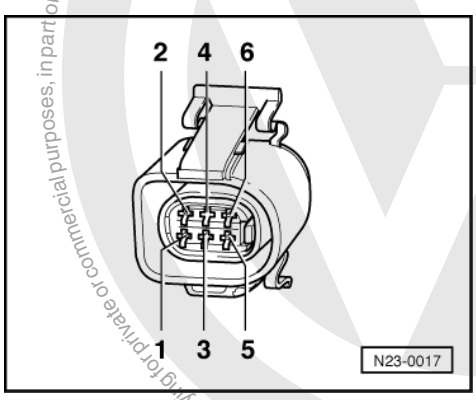

- -> Check wiring between test box and connections for open circuit using current flow diagram.
  Contact 1+ socket 19
  Contact 2+ socket 33
  Contact 3+ socket 23
  Contact 5+ socket 1
  Contact 6+ socket 13
  Wire resistance: max. 1.5 ω
- Additionally check wires for short to one another, to vehicle earth and to battery positive.
  Specification: ∞ω

If no wiring fault is detected:

- Renew Diesel direct injection system control unit (J248) => Page 117

2.16 - Checking speedometer sender

Special tools, workshop equipment, testers, measuring instruments and auxiliary items required

- Fault reader V.A.G 1551 or vehicle system tester V.A.G 1552 with cable V.A.G 1551/3
- Test box V.A.G 1598/18 or V.A.G 1598/22

Protected by copyright. Copying for private or commercial purposes, in part or in whole, is not permitted unless authorised by Volkswagen AG. Volkswagen AG does not guarantee or accept any liability with respect to the correctness of information in this document. Copyright by Volkswagen AG.
satelettronica

- Adapter set V.A.G 1594
- Diode test lamp V.A.G 1527
- Current flow diagram

Note:

To check the speed signal the vehicle must be driven. To do this a second person is necessary.

Warning! Secure fault reader to rear seat and operate from this position.

Test sequence

- Connect fault reader V.A.G 1551 (V.A.G 1552) and select engine electronics control unit with the "Address word" 01. When doing this the engine must be running at idling speed.
  (Connecting fault reader and selecting engine electronics control unit => Page 2 .)

-> Indicated on display:

```
Rapid data transfer      HELP
Select function XX
```

- Press keys 0 and 8 for the function "Read measured value block" and confirm entry with Q key.

-> Indicated on display:

```
Read measured value block      HELP
Input display group number XXX
```

- Press keys 0, 0 and 6 for "Display group number 6" and confirm entry with Q key.
- Carry out a test drive and compare display with speedometer (2nd person required).

-> Specification display zone 1: Approx. road speed.

```
Read measured value block 6
    55 km/h    0     0     0     000000
255
```

- Press ⇒key.
- Press keys 0 and 6 for the function "End output" and confirm entry with the Q key.

If no speed is indicated:

Vehicles with 68-pin control unit

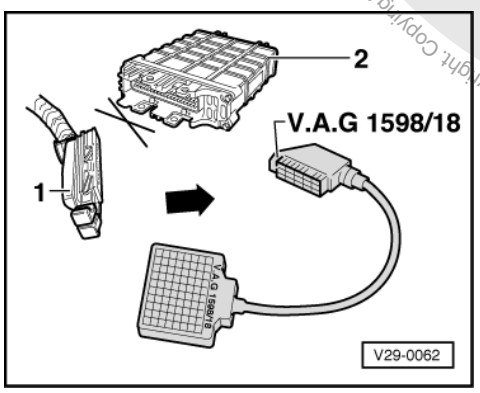

- -> Connect test box V.A.G 1598/18 to control unit wiring loom.
- Bridge sockets 1+42 with auxiliary cables from V.A.G 1594.
- Set multimeter scale to measure voltage and connect between test box sockets 43 + 33.
- Switch on ignition.
- Rotate front wheel and observe voltage display.
  Specification: between 0 and at least 5 Volt fluctuating

Protected by copyright. Copying for private or commercial purposes, in part or in whole, is not permitted unless authorised by Volkswagen AG. Volkswagen AG does not guarantee or accept any liability with respect to the correctness of information in this document. Copyright by Volkswagen AG.
satelettronica

Note:

If necessary, hold the front right wheel to prevent it from turning.

If the display does not fluctuate:

- Check wiring to speedometer or to speedometer sender.

=> Current flow diagrams, Electrical fault finding and Fitting locations binder

Vehicles with 80-pin control unit

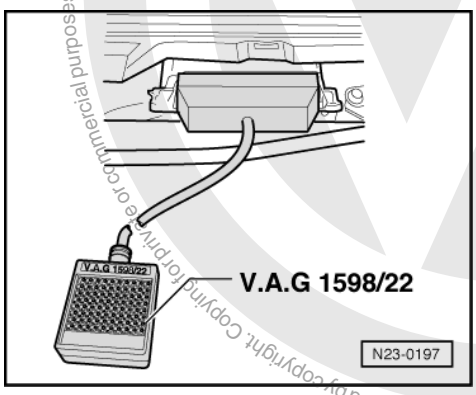

- -> Connect test box V.A.G 1598/22 to control unit wiring harness.
- Bridge sockets 1+33 with auxiliary cables from V.A.G 1594.
- Connect diode test lamp between socket 1 (earth) and socket 51 (speed signal).
- Switch on the ignition and turn the front left wheel by hand.

Note:

If necessary, hold the front right wheel to prevent it from turning.

- The diode test lamp must flash (approx. four times per wheel rotation).
- If the diode test lamp does not flash, check wiring from engine control unit connector contact 51 to dash panel insert for open/short circuit.

=> Current flow diagrams, Electrical fault finding and Fitting locations binder

3 - Replacing, coding and matching engine control unit

3.1 - Replacing, coding and matching engine control unit

3.2 - Replacing engine control unit

Special tools, workshop equipment, testers, measuring instruments and auxiliary items required

- Fault reader V.A.G 1551 with cable V.A.G 1551/3

Work sequence

- First print out the control unit identification and thereby the previous control unit coding as follows:
- Connect fault reader V.A.G 1551 (V.A.G 1552) and select the engine electronics control unit with the "address word" 01
  => Page 2 ; Connecting fault reader and selecting engine electronics control unit.

```
028906021DL 1.9l R4 EDC G00SG 0828
Coding 00002     WSC XXXXX
```

satelettronica

-> Press Print key of fault reader for control unit identification print-out (example).
- Press ⇒key.
- Press keys 0 and 6 for the function "End output" and confirm entry with the Q key.

-> Indicated on display:

```
Rapid data transfer      HELP
Select function XX
```

- Switch off ignition.
- Remove plenum chamber cover.

=> General body repairs; Repair group 66; Trim; Removing and installing plenum chamber cover Trim Removing and installing plenum chamber cover

- Pull vacuum hose off control unit.
- Release and pull off control unit connector.

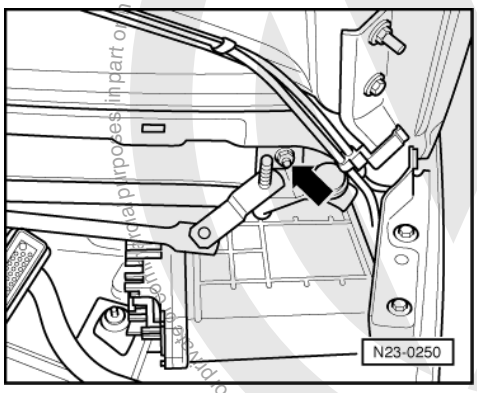

- -> Remove control unit bracket and take out old control unit with bracket.
- Before installing exchange engine control unit, note part number.
- Install new control unit with bracket.
- Check the previous coding and Part No. of the old control unit and code the exchange control unit according to table => Page 118 .

- If the vehicle is equipped with a cruise control system (CCS) (recognised by a G before gearbox version, e.g. G00SG) then this must be activated on exchange engine control unit.

=> Current flow diagrams, Electrical fault finding and Fitting locations binder

- Match engine control unit to the electronic immobilizer => Page 120

3.3 - Coding engine control unit

There are control units which must not be coded (engine control unit MSA12) and control units which must be coded (engine control unit MSA15).

If the appropriate code for the vehicle is not displayed or if the control unit has been renewed, the control unit must be coded as follows.

Warning!
Always display the the control unit identification first and print out if necessary.
emissions.

Special tools, workshop equipment, testers, measuring instruments and auxiliary items required

- Fault reader V.A.G 1551 or vehicle system tester V.A.G 1552 with cable V.A.G 1551/3

Protected by copyright. Copyright by Volkswagen AG.
Volkswagen AG does not guarantee or accept any liability with respect to the correctness of information in this document. Copyright by Volkswagen AG.
Distribution to third parties not permitted unless authorised by Volkswagen AG.
For training purposes only.
satelettronica

Work sequence

- Connect fault reader V.A.G 1551 (V.A.G 1552) and select engine electronics control unit with the "Address word" 01. When doing this the ignition must be switched on.
  (Connecting fault reader and selecting engine electronics control unit => Page 2 .)

Control unit identification of MSA12

-> If the fault reader V.A.G 1551 displays this control unit identification, then the control unit must not be coded (example):

```
028906021C      1.9 ltr.      R4      EDC
SG      D..
Coding 0000      WSC0000
```

- There are no zeros in front of the type of gearbox (MG or AG).
- The software version begins with a letter.

Externally the MSA12 can be recognised by the plastic housing.

Control unit identification of MSA15

-> If the fault reader V.A.G 1551 displays this control unit identification, then the control unit must be coded (example).

```
028906021DF 1.9l R4 EDC G00SG 0602
Coding 00002      WSC XXXXX
```

- There are two zeros in front of gearbox version (SG or AG) or G if the vehicle is equipped with a cruise control system (CCS).
- The software version is made up of a 4 digit number, e.g. 0602 or a capital letter-number combination, e.g. KD02.
- The display KDxx means that the engine control unit is an exchange engine control unit. See engine control unit print-out for coding to be entered.

Externally the MSA15 is recognised by the aluminium housing.

- Press ⇒key.

-> Indicated on display:

```
Rapid data transfer      HELP
Select function XX
```

- Press keys 0 and 7 for the function "Code control unit" and confirm entry with Q key.

-> Indicated on display:

```
Code control unit        Q
Input code number xxxxx (0-32000)
```

Coding when replacing a MSA 12 engine control unit with a MSA 15 engine control unit

- Code the exchange engine control unit MSA15 according to table.

Example:

Part number of old control unit MSA12:
- 028 906 021 CJ

Part number of exchange control unit MSA15:
- 028 906 021 HA

Coding of exchange engine control unit MSA15:
- 00002

Protected by copyright. Copyright by Volkswagen AG. Volkswagen AG does not guarantee or accept any liability with respect to the correctness of information in this document. Copyright by Volkswagen AG. Copying for private or commercial purposes, in whole or in part, is not permitted unless authorised by Volkswagen AG.
satelettronica

Control unit MSA12	Exchange control unit MSA15	Coding for exchange control unit MSA 15
028 906 021 CJ	028 906 021 HA	00002
028 906 021 CQ	028 906 021 HA	00005

Coding engine control unit MSA 15 (without display "KDxx" in control unit identification)

- Enter the appropriate code number for this vehicle and confirm with Q key.

Coding	For vehicles with
00001	Automatic gearbox (not relevant)
00002	Manual gearbox
00005	Manual gearbox engine code in Caddy

-> Fault reader V.A.G 1551 displays control unit coding, e.g.:

```
028906021HA 1.9l R4 EDC G00SG 1439
Coding 00002     WSC XXXXX
```

- Press ⇒key.
- Press keys 0 and 6 for the "End data transfer" function and confirm input with the Q key.
- Switch ignition off and then on again.

Note:

The coding entered will be activated by switching the ignition off and then on again. If after entering the valid code the ignition is not switched off and on again, the fault "Control unit incorrectly coded" in the fault memory cannot be erased.

- Erasing fault memory => Page 12
- Activating cruise control system

=> Current flow diagrams, Electrical fault finding and Fitting locations binder

3.4 - Matching engine control unit to electronic immobilizer

Special tools, workshop equipment, testers, measuring instruments and auxiliary items required

◆ Fault reader V.A.G 1551 or vehicle system tester V.A.G 1552 with cable V.A.G 1551/3

Test conditions

• Authorized vehicle key required

Work sequence

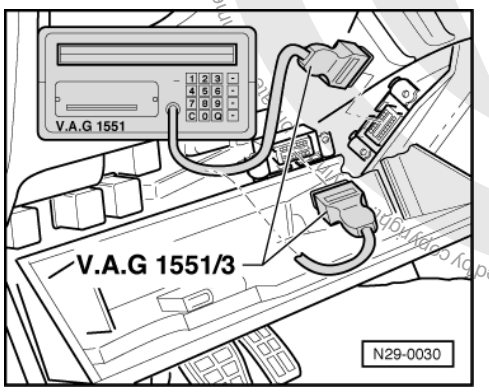

satelettronica
Protected by copyright. Copyright by Volkswagen AG. Volkswagen AG does not guarantee or accept any liability with respect to the correctness of information in this document. Copyright by Volkswagen AG. Reproduced by Volkswagen AG unless permitted. Not permitted for commercial purposes, in part or whole.

- -> Fold driver's side stowage compartment down.
- Connect fault reader V.A.G 1551 or vehicle system tester V.A.G 1552 with cable V.A.G 1551/3.
- Connect fault reader or system tester using cable V.A.G 1551/3 to diagnosis connection.
- Switch on ignition.
- Operate fault reader or vehicle system tester taking into account the information on the display:
- Press key 1 for "Rapid data transfer".
- Press keys 2 and 5 for address word "Immobilizer" and confirm entry with Q key.
- Press the ⇒key.

-> Indicated on display:

```
Rapid data transfer     HELP
Select function XX
```

- Press keys 1 and 0 for function "Adaption" and confirm entry with Q key.

-> Indicated on display:

```
Adaption
Feed in channel number XX
```

- Press key 0 twice for "Channel number 0" and confirm entry with Q key.

-> Indicated on display:

```
Adaption     Q
Erase learnt values?
```

- Confirm input with Q key.

-> Indicated on display:

```
Adaption
Learnt values have been erased
```

- Conclude adaption by pressing ⇒ key.
- Press keys 0 and 6 for the "End data transfer" function and confirm input with the Q key.

- Switch off ignition.

Note:

The identity of the engine control unit is read into the immobilizer control unit when next switching the ignition on.

Protected by copyright. Copying for private or commercial purposes, in part or in whole, is not permitted unless authorised by Volkswagen AG. Volkswagen AG does not guarantee or accept any liability with respect to the correctness of information in this document. Copyright by Volkswagen AG.

satelettronica

28 - Glow plug system

1 - Checking glow plug system

1.1 - Checking glow plug system

Special tools, workshop equipment, testers, measuring instruments and auxiliary items required

- Hand multimeter V.A.G 1526
- Adapter set V.A.G 1594

Test conditions

- Battery voltage at least 11.5 V
- Ignition switched off
- Diesel direct injection system control unit (J248) OK.
- Glow plug strip fuse (S 39) OK.

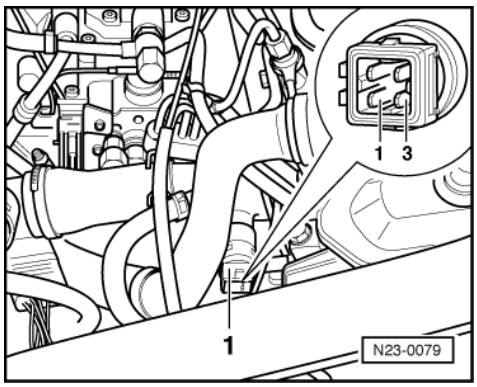

Test sequence

- -> Pull connector off coolant temperature sender -1-.

Note:

Pulling the connector off sender, simulates engine condition "cold" and when switching the ignition on the relevant glow period is carried out.

- Pull glow plug connector off glow plug.
- Connect multimeter to measure voltage between a glow plug connector and vehicle earth.
- Switch on ignition for approx. 20 seconds
  approx. battery voltage
  must be displayed.
- If no voltage is present:

=> Current flow diagrams, Electrical fault finding and Fitting locations binder

1.2 - Checking glow plugs

Special tools, workshop equipment, testers, measuring instruments and auxiliary items required

- Diode test lamp V.A.G 1527

Protected by copyright. Copyright by Volkswagen AG. Copying for commercial purposes, in any form, not permitted unless authorised by Volkswagen AG. Volkswagen AG does not guarantee or accept any liability with respect to the correctness of information in this document.
satelettronica

- Adapter set V.A.G 1594

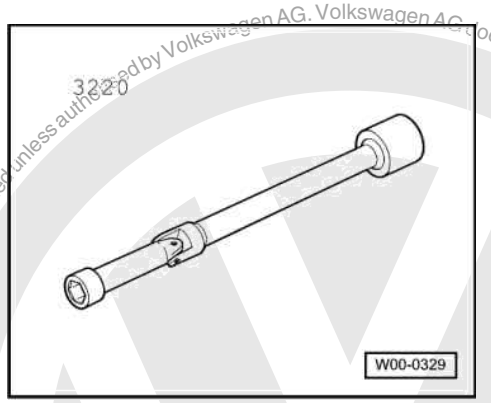

- -> 3220 Jointed socket
- Torque wrench V.A.G 1331 (5...50 Nm)

Test conditions

- Battery voltage at least 11.5 V
- Ignition switched off

Test sequence

- Pull glow plug connector off glow plug.

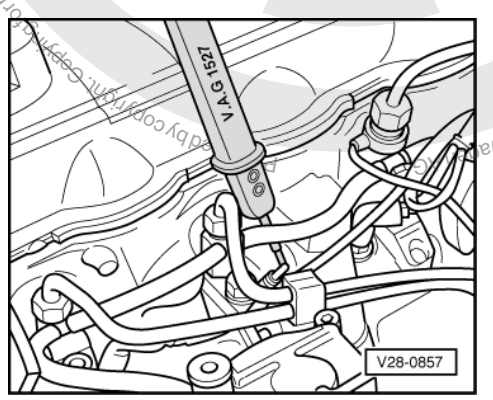

- -> Connect diode test lamp wire using auxiliary clips from auxiliary cable set to battery positive (+).
- Place diode test lamp probe on each glow plug one after the other.
  Diode lights up: glow plug OK.
  Diode does not light up: replace glow plug.
- Remove and install glow plugs with jointed spanner 3220
  Tightening torque: 15 Nm.

Reproduced by Volkswagen AG. Volkswagen AG does not guarantee or accept any liability with respect to the correctness of information in this document. Copyright by Volkswagen AG. Copying for private or commercial purposes, in part or in whole, is not permitted unless authorised by copyright.

satelettronica